Service Facts

Multi-Speed Air Conditioners and Heat Pumps with WeatherGuard™ featuring ComfortSeek™

5TWX7024A	5TTX7024A
5TWX7036A	5TTX7036A
5TWX7048A	5TTX7048A
5TWX7060B	5TTX7060B

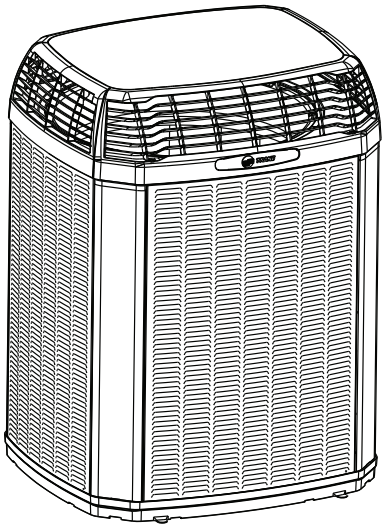

Notes:

- *Graphics in this document are for representation only. Actual model may differ in appearance.*
- *R-454B refrigerant is an "A2L" refrigerant meaning: A = nontoxic, 2 = flammable, L = low burning velocity. The term "A2L" is used throughout this document.*

⚠ SAFETY WARNING

Only qualified personnel should install and service the equipment. The installation, starting up, and servicing of heating, ventilating, and air-conditioning equipment can be hazardous and requires specific knowledge and training. Improperly installed, adjusted or altered equipment by an unqualified person could result in death or serious injury. When working on the equipment, observe all precautions in the literature and on the tags, stickers, and labels that are attached to the equipment.

February 2026

ODR-SVF002C-EN

Introduction

Read this manual thoroughly before operating or servicing this unit.

This document is customer property and is to remain with this unit. Return to the service information pack upon completion of work.

Warnings, Cautions, and Notices

Safety advisories appear throughout this manual as required. Your personal safety and the proper operation of this machine depend upon the strict observance of these precautions.

The three types of advisories are defined as follows:

⚠ WARNING	Indicates a potentially hazardous situation which, if not avoided, could result in death or serious injury.
⚠ CAUTION	Indicates a potentially hazardous situation which, if not avoided, could result in minor or moderate injury. It could also be used to alert against unsafe practices.
NOTICE	Indicates a situation that could result in equipment or property-damage only accidents.

Important Environmental Concerns

Scientific research has shown that certain man-made chemicals can affect the earth's naturally occurring stratospheric ozone layer when released to the atmosphere. In particular, several of the identified chemicals that may affect the ozone layer are refrigerants that contain Chlorine, Fluorine and Carbon (CFCs) and those containing Hydrogen, Chlorine, Fluorine and Carbon (HCFCs). Not all refrigerants containing these compounds have the same potential impact to the environment. Trane advocates the responsible handling of all refrigerants.

Important Responsible Refrigerant Practices

Trane believes that responsible refrigerant practices are important to the environment, our customers, and the air conditioning industry. All technicians who handle refrigerants must be certified according to local rules. For the USA, the Federal Clean Air Act (Section 608) sets forth the requirements for handling, reclaiming, recovering and recycling of certain refrigerants and the equipment that is used in these service procedures. In addition, some states or municipalities may have additional requirements that must also be adhered to for responsible management of refrigerants. Know the applicable laws and follow them.

⚠ WARNING

Proper Field Wiring and Grounding Required!

Failure to follow code could result in death or serious injury.

All field wiring MUST be performed by qualified personnel. Improperly installed and grounded field wiring poses FIRE and ELECTROCUTION hazards. To avoid these hazards, you MUST follow requirements for field wiring installation and grounding as described in NEC and your local/state/national electrical codes.

⚠ WARNING

Personal Protective Equipment (PPE) Required!

Failure to wear proper PPE for the job being undertaken could result in death or serious injury.

Technicians, in order to protect themselves from potential electrical, mechanical, and chemical hazards, MUST follow precautions in this manual and on the tags, stickers, and labels, as well as the instructions below:

- **Before installing/servicing this unit, technicians MUST put on all PPE required for the work being undertaken (Examples; cut resistant gloves/ sleeves, butyl gloves, safety glasses, hard hat/ bump cap, fall protection, electrical PPE and arc flash clothing). ALWAYS refer to appropriate Safety Data Sheets (SDS) and OSHA guidelines for proper PPE.**
- **When working with or around hazardous chemicals, ALWAYS refer to the appropriate SDS and OSHA/GHS (Global Harmonized System of Classification and Labelling of Chemicals) guidelines for information on allowable personal exposure levels, proper respiratory protection and handling instructions.**
- **If there is a risk of energized electrical contact, arc, or flash, technicians MUST put on all PPE in accordance with OSHA, NFPA 70E, or other country-specific requirements for arc flash protection, PRIOR to servicing the unit. NEVER PERFORM ANY SWITCHING, DISCONNECTING, OR VOLTAGE TESTING WITHOUT PROPER ELECTRICAL PPE AND ARC FLASH CLOTHING. ENSURE ELECTRICAL METERS AND EQUIPMENT ARE PROPERLY RATED FOR INTENDED VOLTAGE.**

©2026 Trane

⚠ WARNING

Follow EHS Policies!

Failure to follow instructions below could result in death or serious injury.

- **All Trane personnel must follow the company's Environmental, Health and Safety (EHS) policies when performing work such as hot work, electrical, fall protection, lockout/tagout, refrigerant handling, etc. Where local regulations are more stringent than these policies, those regulations supersede these policies.**
- **Non-Trane personnel should always follow local regulations.**

⚠ WARNING

Cancer and Reproductive Harm!

This product can expose you to chemicals, including lead, which are known to the State of California to cause cancer and birth defects or other reproductive harm. For more information go to www.P65Warnings.ca.gov.

⚠ WARNING

Safety Hazard!

Failure to follow instructions below could result in death or serious injury or property damage.

This unit is not to be used by persons (including children) with reduced physical, sensory, or mental capabilities, or lack of experience and knowledge, unless they have been given supervision or instruction concerning the use of the appliance by a person responsible for their safety.

Do not allow children to play or climb on the unit or to clean or maintain the unit without supervision.

⚠ WARNING

Hazardous Voltage!

Failure to disconnect power before servicing could result in death or serious injury.

Disconnect all electric power, including remote disconnects before servicing. Follow proper lockout/tagout procedures to ensure the power can not be inadvertently energized. Verify that no power is present with a voltmeter.

⚠ WARNING

R-454B Refrigerant!

Failure to use proper equipment or components as described below could result in death, serious injury, or equipment damage.

- **Use ONLY R-454B rated service equipment with these units.**
- **All R-454B systems with variable speed compressors use variable speed compressor oil, which absorbs moisture from the air. To limit this hygroscopic action, keep the system sealed. If exposed to air for over 4 hours, replace the compressor oil.**
- **Never break a vacuum with air and always replace driers when opening the system to replace components.**

⚠ WARNING

Hot Surface!

Failure to follow instructions below could result in minor to severe burns.

Do not touch top of compressor. It may be hot.

⚠ WARNING

Refrigerant under High Pressure!

Failure to follow instructions below could result in an explosion which could result in death or serious injury or equipment damage.

System contains oil and refrigerant under high pressure. Recover refrigerant to relieve pressure before opening the system. See unit nameplate for refrigerant type. Do not use non-approved refrigerants, refrigerant substitutes, or refrigerant additives.

⚠ WARNING

Grounding Required!

Failure to follow instructions below could result in death or serious injury, or property damage.

- **Reconnect all grounding devices.**
- **All parts of this product that are capable of conducting electrical current are grounded.**
- **If grounding wires, screws, straps, clips, nuts, or washers used to complete a path to ground are removed for service, they must be returned to their original position and properly fastened.**

⚠ WARNING

System Charge!

Failure to follow instructions below could result in abrupt release of system charge and could result in serious injury or property damage.

When opening the suction and liquid line service valve, turn the valve stem counterclockwise only until the stem contacts the rolled edge. Do not apply torque.

⚠ WARNING

Electrical Shock Hazard!

Failure to follow instructions below could result in death or serious injury or property damage.

Confirm proper grounding before connecting electrical supply.

⚠ WARNING

Risk of Fire — Flammable Refrigerant!

Failure to follow instructions below could result in death or serious injury, and equipment damage.

- **To be repaired only by trained service personnel.**
- **Do not puncture refrigerant tubing.**
- **Dispose of properly in accordance with federal or local regulations.**

⚠ WARNING

Ventilation Required!

Failure to follow instructions below could result in death or serious injury or property damage.

Confirm the area is adequately ventilated before breaking into the system or conducting any hot work.

⚠ CAUTION

Caution!

Failure to follow instructions below could result in minor to moderate injury or equipment damage.

- **For brazing, confirm all joints are brazed, not soldered.**
- **For mechanical connections, confirm a negative leak test.**
- **Inspect lines and use proper service tools.**

NOTICE

Equipment Damage!

Failure to follow instructions below could result in equipment damage.

Use only R-454B rated indoor models, service equipment, and components with these units.

⚠ WARNING

Electrical Hazard!

Failure to follow instructions below could result in death or personal injury.

WAIT TWO (2) MINUTES after disconnecting power prior to touching electrical components as they may hold a dangerous charge of 400 VDC. Then verify DC Voltage is less than 42 VDC at inverter test points labeled +DC and -DC before servicing board.

Copyright

This document and the information in it are the property of Trane, and may not be used or reproduced in whole or in part without written permission. Trane reserves the right to revise this publication at any time, and to make changes to its content without obligation to notify any person of such revision or change.

Trademark

All trademarks referenced in this document are the trademarks of their respective owners.

Revision History

- Updated the Product Specifications table.
- Updated Low Voltage Connection Diagrams section in Integrated Variable Speed Control Board LED Indicators chapter.
- Updated Sensors chapter.
- Updated Inverter Temperature chapter.

Product Specifications

Table 1. Heat pump models

OUTDOOR UNIT [a] [b]	5TWX7024A	5TWX7036A	5TWX7048A	5TWX7060A
POWER CONNS. – V/PH/HZ [c]	208/230/1/60	208/230/1/60	208/230/1/60	208/230/1/60
MIN. BRCH. CIR. AMPACITY	18	29	33	39
BR. CIR. PROT. RTG. – REC/MAX. (AMPS)	20/30	30/40	35/50	40/60
COMPRESSOR	Inverter Scroll	Inverter Scroll	Inverter Scroll	Inverter Scroll
NO. USED – NO. SPEEDS	1–MULTI	1–MULTI	1–MULTI	1–MULTI
MRC	17.8	27.1	39.2	46.1
FACTORY INSTALLED				
START COMPONENTS [d]	NA	NA	NA	NA
INSULATION/SOUND BLANKET	NO	NO	NO	NO
COMPRESSOR HEAT	YES	YES	YES	YES
OUTDOOR FAN				
DIA. (IN.) – NO. USED	23 – 1	23 – 1	27.5 – 1	27.5 – 1
TYPE DRIVE – NO. SPEEDS	DIRECT – VARIABLE	DIRECT – VARIABLE	DIRECT – VARIABLE	DIRECT – VARIABLE
NO. MOTORS – HP	1 – 1/3	1 – 1/3	1 – 1/2	1 – 1/2
MOTOR SPEED R.P.M.	600–1050	600–1050	600–1050	600–1050
VOLTS/PH/HZ	245–385/3/60	245–385/3/60	245–385/3/60	245–385/3/60
MOC	1.5	1.5	2.3	2.3
OUTDOOR COIL – TYPE	SPINE FIN™	SPINE FIN™	SPINE FIN™	SPINE FIN™
ROWS – F.P.I.	1 – 24	1 – 24	1 –24	1– 24
FACE AREA (SQ. FT.)	23.75	23.75	27.87	27.87
TUBE SIZE (IN.)	3/8	3/8	3/8	3/8
REFRIGERANT	R-454B	R-454B	R-454B	R-454B
lb – R-454B (O.D. UNIT) [e]	5 lb, 4 oz	5 lb, 8 oz	7 lb, 4 oz	7 lb, 4 oz
FACTORY SUPPLIED	YES	YES	YES	YES
RATED LINE SIZE – IN. O.D. GAS [f]	3/4	3/4	7/8	7/8
RATED LINE SIZE – IN. O.D. LIQ. [f]	5/16	5/16	5/16	3/8
CHARGING SPECIFICATIONS				
SUBCOOLING	10°F	12°F	12°F	10°F
DIMENSIONS	H X W X D	H X W X D	H X W X D	H X W X D
CRATED (IN.)	51 x 30 x 33	51 x 30 x 33	51 x 35 x 38	51 x 35 x 38
WEIGHT				
SHIPPING (lb)	223	223	264	264
NET (lb)	204	204	241	241

(a) Certified in accordance with the Air-Source Unitary Air-conditioner Equipment certification program, which is based on AHRI standard 210/240.
(b) Rated in accordance with AHRI standard 270/275.
(c) Calculated in accordance with Natl. Elec. Codes. Use only HACR circuit breakers or fuses.
(d) NA means no start components. Yes means quick start kit components. PTC means positive temperature coefficient starter.
(e) This value approximate. For more precise value see unit nameplate.
(f) The maximum length of refrigerant lines from outdoor to indoor varies depending on application. See Installer's Guide Table 4 for allowable applications.

Table 2. Air conditioner models

OUTDOOR UNIT [a] [b]	5TTX7024A	5TTX7036A	5TTX7048A	5TTX7060A
POWER CONNS. – V/PH/HZ [c]	208/230/1/60	208/230/1/60	208/230/1/60	208/230/1/60
MIN. BRCH. CIR. AMPACITY	18	29	33	39
BR. CIR. PROT. RTG. – REC/MAX. (AMPS)	20/30	30/40	35/50	40/60
COMPRESSOR	Inverter Scroll	Inverter Scroll	Inverter Scroll	Inverter Scroll
NO. USED – NO. SPEEDS	1–MULTI	1–MULTI	1–MULTI	1–MULTI
MRC	17.8	27.1	39.2	46.1
FACTORY INSTALLED				
START COMPONENTS [d]	NA	NA	NA	NA
INSULATION/SOUND BLANKET	NO	NO	NO	NO
COMPRESSOR HEAT	YES	YES	YES	YES
OUTDOOR FAN				
DIA. (IN.) – NO. USED	23 – 1	23 – 1	27.5 – 1	27.5 – 1
TYPE DRIVE – NO. SPEEDS	DIRECT – VARIABLE	DIRECT – VARIABLE	DIRECT – VARIABLE	DIRECT – VARIABLE
NO. MOTORS – HP	1 – 1/3	1 – 1/3	1 – 1/2	1 – 1/2
MOTOR SPEED R.P.M.	600–1050	600–1050	600–1050	600–1050
VOLTS/PH/HZ	245–385/3/60	245–385/3/60	245–385/3/60	245–385/3/60
MOC	1.5	1.5	2.3	2.3
OUTDOOR COIL – TYPE	SPINE FIN™	SPINE FIN™	SPINE FIN™	SPINE FIN™
ROWS – F.P.I.	1 – 24	1 – 24	1 – 24	1 – 24
FACE AREA (SQ. FT.)	23.75	23.75	27.87	27.87
TUBE SIZE (IN.)	3/8	3/8	3/8	3/8
REFRIGERANT	R-454B	R-454B	R-454B	R-454B
lb – R-454B (O.D. UNIT) [e]	5 lb, 1 oz	5 lb, 5 oz	7 lb, 1 oz	7 lb, 1 oz
FACTORY SUPPLIED	YES	YES	YES	YES
RATED LINE SIZE – IN. O.D. GAS [f]	3/4	3/4	7/8	7/8
RATED LINE SIZE – IN. O.D. LIQ. [f]	5/16	5/16	5/16	5/16
CHARGING SPECIFICATIONS				
SUBCOOLING	10°F	12°F	12°F	10°F
DIMENSIONS	H X W X D	H X W X D	H X W X D	H X W X D
CRATED (IN.)	51 x 30 x 33	51 x 30 x 33	51 x 35 x 38	51 x 35 x 38
WEIGHT				
SHIPPING (lb)	223	223	264	264
NET (lb)	204	204	241	241

[a] Certified in accordance with the Air-Source Unitary Air-conditioner Equipment certification program, which is based on AHRI standard 210/240.
[b] Rated in accordance with AHRI standard 270/275.
[c] Calculated in accordance with Natl. Elec. Codes. Use only HACR circuit breakers or fuses.
[d] NA means no start components. Yes means quick start kit components. PTC means positive temperature coefficient starter.
[e] This value approximate. For more precise value see unit nameplate.
[f] The maximum length of refrigerant lines from outdoor to indoor varies depending on application. See Installer's Guide Table 4 for allowable applications.

Charging in Cooling between 55° F and 120° OD Ambient

Trane has always recommended installing Trane approved matched indoor and outdoor systems.

The benefits of installing approved indoor and outdoor split systems are maximum efficiency, optimum performance and the best overall reliability.

The following charging methods are therefore prescribed for matched systems with indoor TXVs / EEVs.

1. Subcooling (in the cooling mode) is the only recommended method of charging between 55° and 120° ambient temperatures.
2. When charging for ambient temperatures above 120°or below 55°F, charge to 10° subcooling. It is important to return when outdoor ambient temperature is between 55° and 120° to verify system charge per these instructions.
3. For best results – the indoor temperature should be kept between 70° to 80°. Add system heat if needed.
4. Locate the designated subcooling target from the unit nameplate.
5. At startup, or whenever charge is removed or added, the system must be operated for a minimum of (20) minutes to stabilize before accurate measurements can be made.
6. Run the system in cooling mode with a Y2 call.

   Measure Liquid Line Temperature and Refrigerant Pressure at service valves.
7. Determine total refrigerant line length, and height (lift) if indoor section is above the condenser. Follow the Subcool Charging Corrections Table to calculate additional subcooling target value.
8. Locate your liquid line temperature in the left column of the table, and the intersecting liquid line gage pressure under the subcool selection column. Add refrigerant to raise the pressure to match the table, or remove refrigerant to lower the pressure. Always wait (20) minutes for the system conditions to stabilize before adjusting charge again.
9. When system is correctly charged, you can refer to System Pressure Curves to verify typical performance.

Subcool Charging Correction Charts

Note: *For systems with 3/8-inch line set diameters, use design subcooling for all length and lift combinations.*

Figure 1. Subcool charging corrections – 2.0 ton

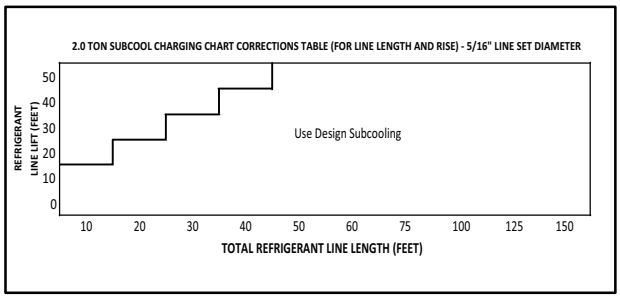

Figure 2. Subcool charging corrections – 3.0 ton

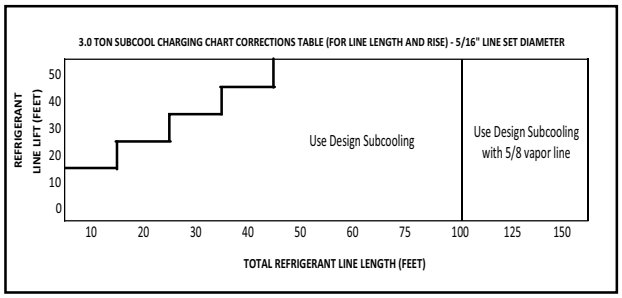

Figure 3. Subcool charging corrections – 4.0 ton

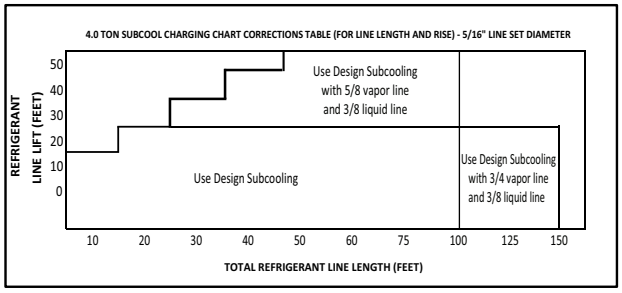

Figure 4. Subcool charging corrections – 5.0 ton

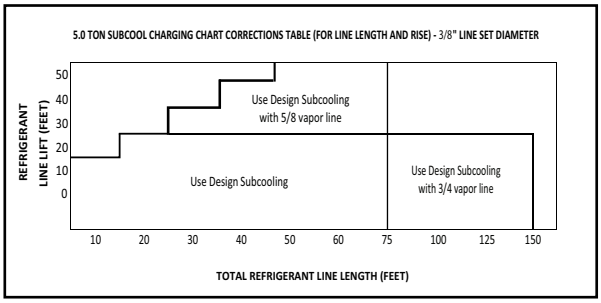

R-454B Refrigerant Charging Chart

Table 3. Refrigerant charging

Liquid temp (f)	Design subcooling (f)						
	8	9	10	11	12	13	14
	Liquid gauge pressure (psig)						
55	170	172	175	178	181	184	187
60	184	187	190	194	197	200	203
65	200	203	206	210	213	217	220
70	217	220	223	227	230	234	238
75	234	238	241	245	249	252	256
80	252	256	260	264	268	272	276
85	272	276	280	284	288	292	297
90	292	297	301	305	309	314	318
95	314	318	323	327	332	336	341
100	336	341	346	351	355	360	365
105	360	365	370	375	380	385	390
110	385	390	396	401	406	412	417
115	412	417	422	428	433	439	445
120	439	445	450	456	462	468	474
125	468	474	480	486	492	498	504

Note: When charging to Subcooling values, use Bubble Temp chart. If referencing Superheat, use Dew Point chart.

Weigh-In Method for Charging

Weigh-In Method can be used for the initial installation, or anytime a system charge is being replaced. Weigh-In Method can also be used when power is not available to the equipment site or operating conditions (indoor/outdoor temperatures) are not in range to verify with the subcooling charging method.

Table 4. Calculating charge using the weigh-in method

Step	Directions	Record Calculations
1	Measure in feet the distance between the outdoor unit and the indoor unit. (Include the entire length of the line from the service valve to the IDU.) Subtract 10 ft from this entire length and record on line 1.	Total Line length (ft) –10 ft _____
2	Enter the charge multiplier (0.47 oz./ft for 3/8" & 0.30 oz./ft for 5/16").	Charge multiplier = for 3/8", use .47 oz. per foot and for 5/16", use .30 oz. per foot
3	Multiply the total length of refrigerant tubing (Line 1) times the value on Step 2. Record the result on Line 3 of the Worksheet.	Step 1 x Step 2 = _____
4	This is the amount of refrigerant to weigh-in prior to opening the service valves.	Refrigerant (oz) = _____

Note: *The only mode approved for setting or validating system charge is using Cooling Mode with a Y2 call for high speed operation. Outdoor Temperature must be between 55°F and 120°F with Indoor Temperature kept between 70°F and 80°F.*

Wiring Diagram

Figure 5. Wiring diagram

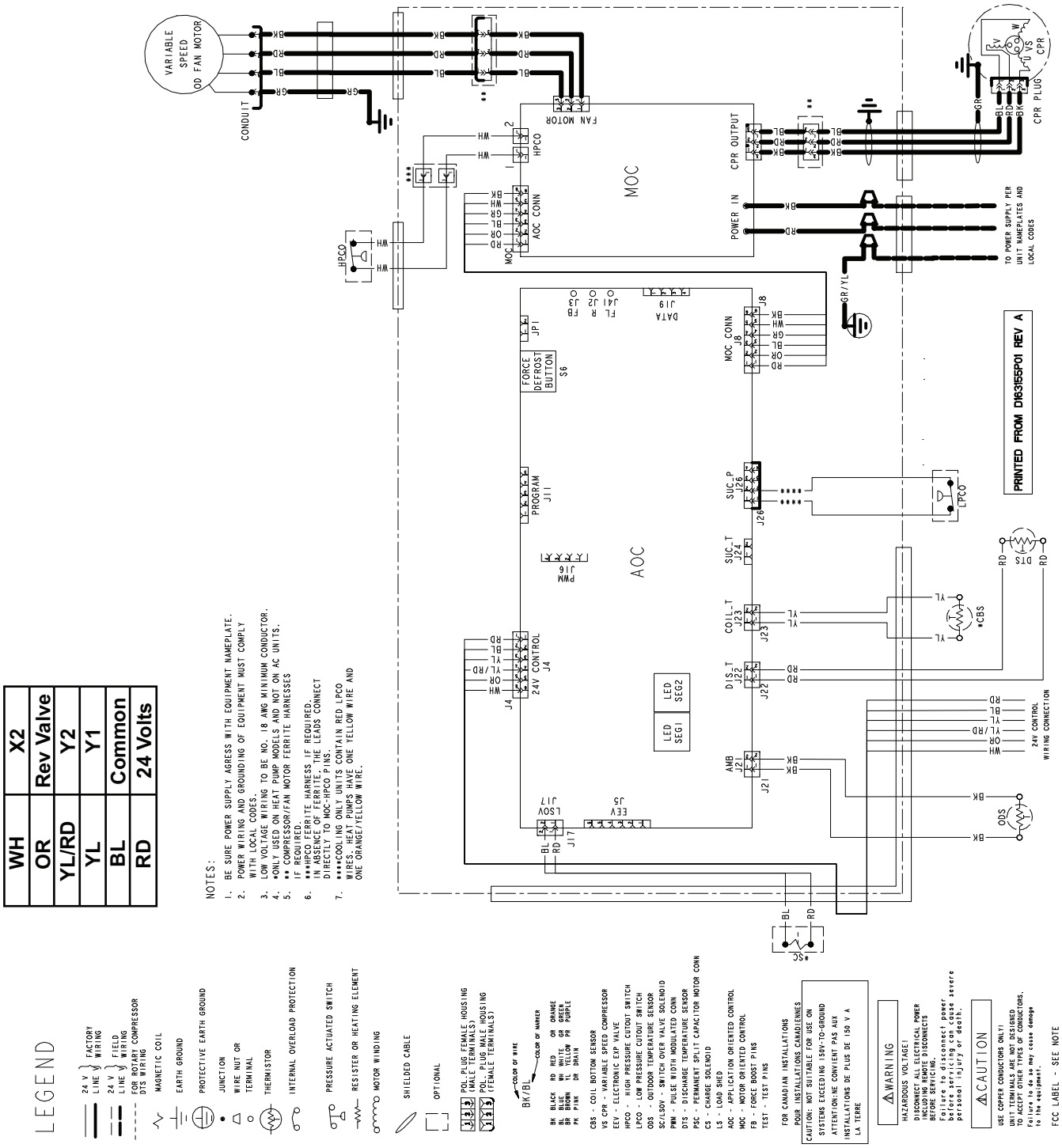

Electrical – High Voltage

High Voltage Power Supply

⚠ WARNING

Live Electrical Components!

Failure to follow all electrical safety precautions when exposed to live electrical components could result in death or serious injury.

When it is necessary to work with live electrical components, have a qualified licensed electrician or other individual who has been properly trained in handling live electrical components perform these tasks.

The high voltage power supply must agree with the equipment nameplate.

Power wiring must comply with national, state, and local codes.

Follow instructions on unit wiring diagram located on the inside of the control box cover and in the Service Facts document included with the unit.

Figure 6. Nameplate location

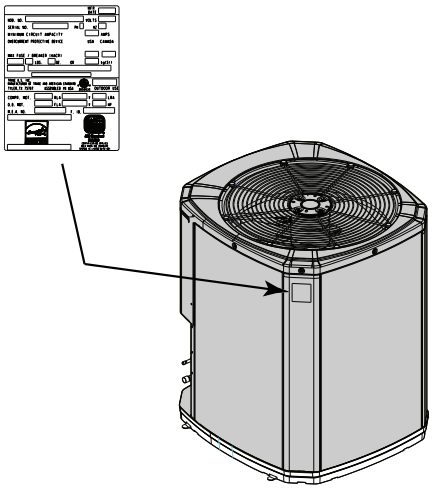

High Voltage Disconnect Switch

Install a separate disconnect switch at the outdoor unit.

For high voltage connections, flexible electrical conduit is recommended whenever vibration transmission may create a noise problem within the structure.

Figure 7. High voltage disconnect switch

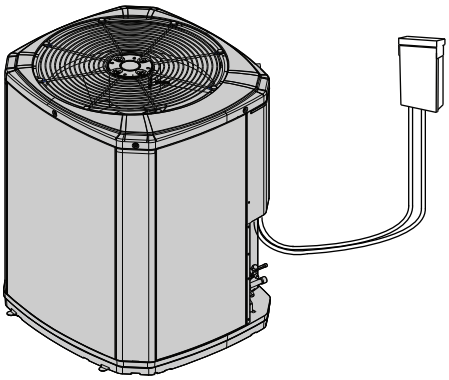

High Voltage Ground

Ground the outdoor unit per national, state, and local code requirements.

Figure 8. Ground the outdoor unit

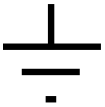

⚠ WARNING

Safety Hazard!

Failure to follow instructions below could result in death or serious injury, and property damage.

Confirm the cabling is protected from wear and tear, corrosion, excessive pressure, vibration, sharp edges, and any other adverse environmental effects.

Integrated Variable Speed Control Board LED Indicators

Figure 9. LED indicators

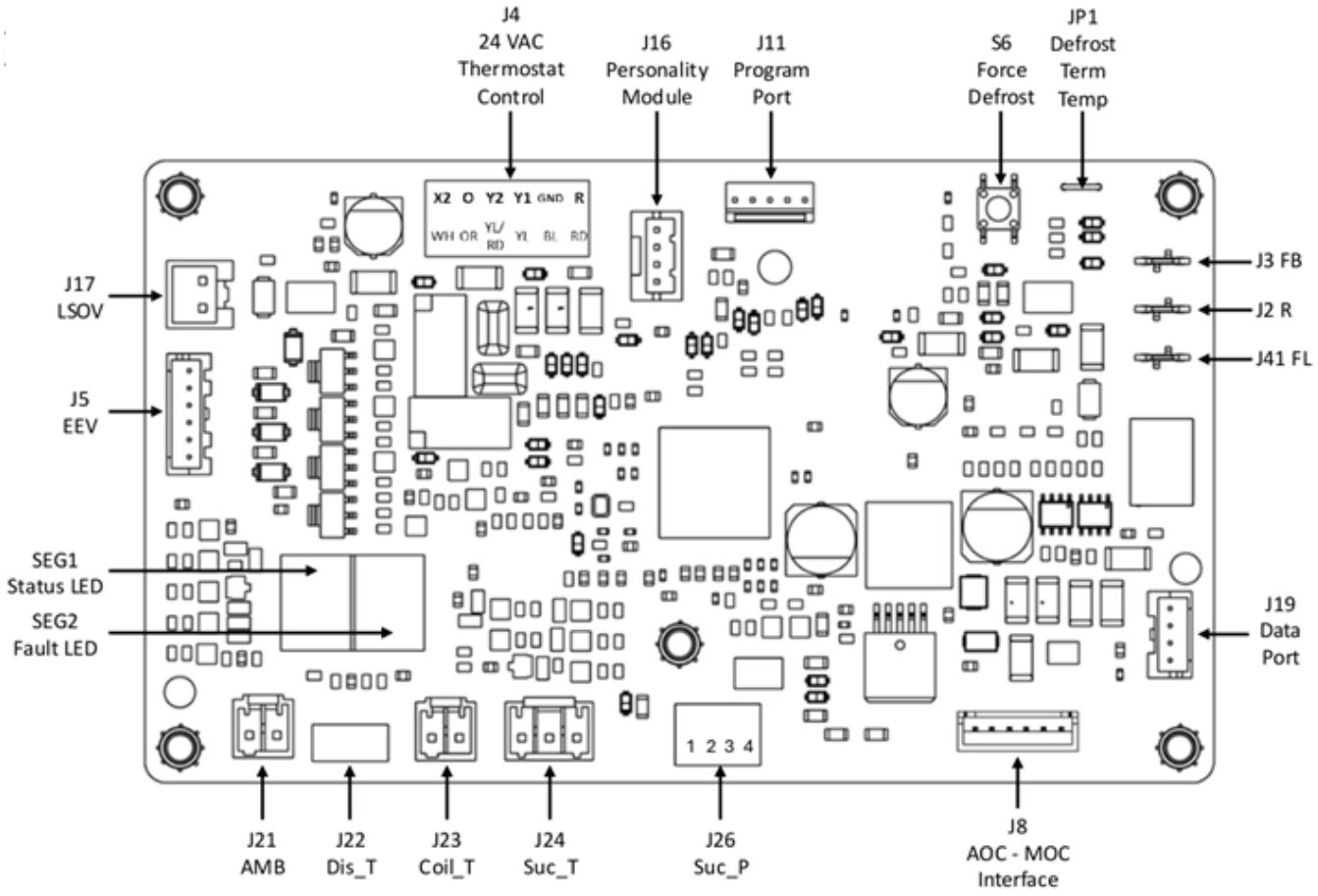

Notes:

- *Multi-speed units display the status and faults via two 7-segment LED displays on the drive AOC.*
- *If multiple faults are present, the 7-segment LED displays will cycle through the faults.*
- *The digital display also offers a diagnostics mode to cycle through historical faults.*

Table 5. Multi-speed status/fault list

Mode	Code/ Display	Status	Fault
Run	00	Standby	
	Y.1	Starting Low	
	Y.2	Starting High	
	Y1	Running Low	
	Y2	Running High	
	Y2.	Running Boost	
	50	Limp Mode	
	60	Preheating	
	70	Defrosting	
	J1	AOC FL Jumper Pin Engaged	
	J2.	AOC FB Jumper Pin Engaged	
Boot	bt	Boot	
	E0	Personality Module (PM) Error	PM Invalid or UID Storage Failed
	E1	Configuration Error	Communication Fault, Config Mismatch
	E2	AOC Application Error	AOC Software/Config Parameter Mismatch

Table 5. Multi-speed status/fault list (continued)

Mode	Code/ Display	Status	Fault
Fault	F0	AOC-MOC Communication Fault	Communication Fault After Boot
	F1	Compressor Start Up Fault	Compressor Start Up fault
	F2	Compressor Over Current	Compressor Over Current
	F3	Compressor Control Fault	Compressor Lost Synchronism Fault
			Compressor Lost Phase
			COMP I-Phase Peak
	F4	Fan Control Fault	OD Fan IPM Overcurrent
			OD Fan Rotation Fault
			OD Fan Lost Phase
			OD Fan Over Current
			OD Fan Start Up Fault
	F5	AC Over Current Fault	Software AC Over Current
			Hardware AC Over Current
			PFC IGBT Over Current
			VDC Hardware Over Voltage
	F6	MOC High Temperature Fault	IPM Over Temperature
			Fan IPM Over Temperature
			PFC Over Temperature
	F7	AC Input Voltage Fault	AC Input Voltage Low
	F8	DC Output Voltage Fault	DC Voltage Low
			DC Voltage High / AC Input Voltage High
	F9	MOC Internal Fault	
	FA	Ambient Temperature Sensor Fault	AOC OD Ambient Temperature Sensor Fault
	FC	Coil Temperature Sensor Fault	AOC Coil Temperature Sensor Fault
	Fd	Discharge Temperature Sensor Fault	AOC Discharge Temperature Sensor Fault
	Fr	24 VAC Control R-Signal Fault	AOC No 24 VAC Control R-Signal on Heat Pump
de-rate	dC	De-rate: Compressor Over Current	AOC SW Compressor Overcurrent
	dF	De-rate: Outdoor Fan Over Current	AOC SW Fan Overcurrent (or MOC SW) De-rate
	d5	De-rate: MOC AC Input Over Current	AOC SW MOC AC Input Overcurrent De-rate
	d6	De-rate: High MOC IPM Temperature	AOC SW High MOC IPM Temperature De-rate
	d7	De-rate: High MOC PFC Temperature	AOC SW High MOC PFC Temperature De-rate
	d8	De-rate: High Coil Temperature	AOC SW High Coil Temperature De-rate
	dd	De-rate: High Discharge Temperature	AOC SW High Discharge Temperature De-rate

Table 5. Multi-speed status/fault list (continued)

Mode	Code/ Display	Status	Fault
Lockout	LC	Lockout: Compressor Over Current	AOC SW Compressor Overcurrent Lockout
	LF	Lockout: Outdoor Fan Over Current	AOC SW Fan Overcurrent Lockout
	L5	Lockout: MOC AC Input Over Current	AOC SW MOC AC Input Overcurrent Lockout
	L6	Lockout: High MOC IPM Temperature	AOC SW High MOC IPM Temperature Lockout
	L7	Lockout: High MOC PFC Temperature	AOC SW High MOC PFC Temperature Lockout
	L8	Lockout: High Coil Temperature	AOC SW High Coil Temperature Lockout
	Ld	Lockout: High Discharge Temperature	AOC SW High Discharge Temperature Lockout
	LL	Lockout: LPCO Low Pressure	AOC Low Suction Pressure Lockout
	LH	Lockout: HPCO / DTC	MOC HPS Circuit Open Lockout
Hard-lock	HC	HardLock: Compressor Over Current	AOC SW Compressor Overcurrent Hard-Lock
	HF	HardLock: Outdoor Fan Over Current	AOC SW Fan Overcurrent Hard-Lock
	H5	HardLock: MOC AC Input Over Current	AOC SW MOC AC Input Overcurrent Hard-Lock
	H6	HardLock: High MOC IPM Temperature	AOC SW High MOC IPM Temperature Hard-Lock
	H7	HardLock: High MOC PFC Temperature	AOC SW High MOC PFC Temperature Hard-Lock
	H8	HardLock: High Coil Temperature	AOC SW High Coil Temperature Hard-Lock
	Hd	HardLock: High Discharge Temperature	AOC SW High Discharge Temperature Hard-Lock
	HL	HardLock: LPCO Low Pressure	AOC Low Suction Pressure Soft-Lock
	HH	HardLock: HPCO / DTC	MOC HPS Circuit Open Hard-Lock

Sump Heat Control

Sump Heat Control Guidelines

Sump Heat ON

- When outdoor temperature is below 80° F and compressor dome temperature is less than the outdoor ambient temperature

Sump Heat OFF

- When the outdoor temperature goes above software-specified limit° F
- Anytime the compressor is running
- For 50 minutes after each compressor run cycle.

Note: *Multi-Speed systems are designed so that the compressor and sump heat will not run at the same time. Compressor windings are used for sump heat. When sump heat is active, line-side current will be approximately 1.5 amps.*

Low Voltage Connection Diagrams

Figure 10. Connection diagrams – 5TEM4, 5TAM5

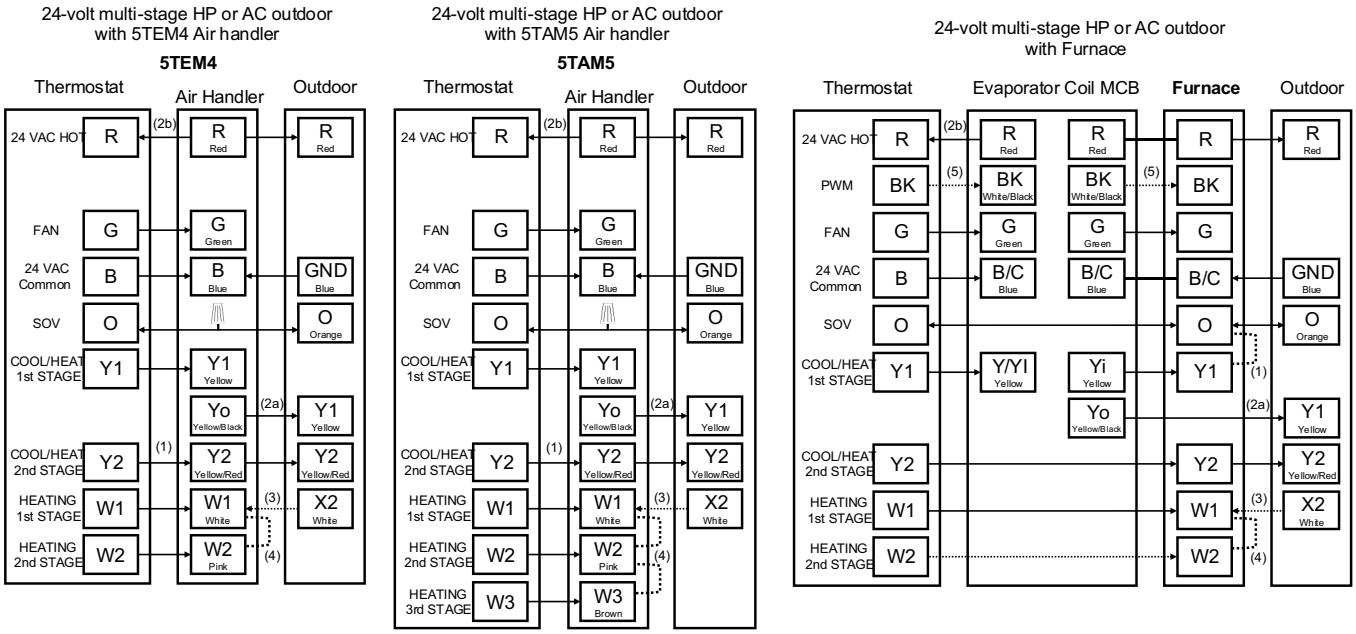

1. Separate Y1 and Y2 at air handler. Remove Y1-O jumper on furnace board with heat pump.
2. Condensate switch, float switch, leak detector, etc. installation options:
   a. Break Y1 to the outdoor so the outdoor shuts down but the indoor blower continues to run.
   b. Break R to the thermostat so the entire system shuts down.
3. Do not wire X2 with select Trane thermostats, defrost is communicated to the thermostat via the O signal.
4. Do not jump W terminals together with select Trane thermostats, high stage heat is automatically called during defrost.
5. For BK functionality with select Trane thermostats: Cut BK jumper at the furnace board and connect BK.

Notes:

- *BK dehumidification reduces indoor airflow when active.*
- *HP models require R and O at the outdoor. AC models do not require O at the outdoor.*
- *Use wire nuts for all pigtail connections and cap all unused wires.*

Figure 11. Connection diagrams – 5TEM6, 5TEMC, and 5TAMX

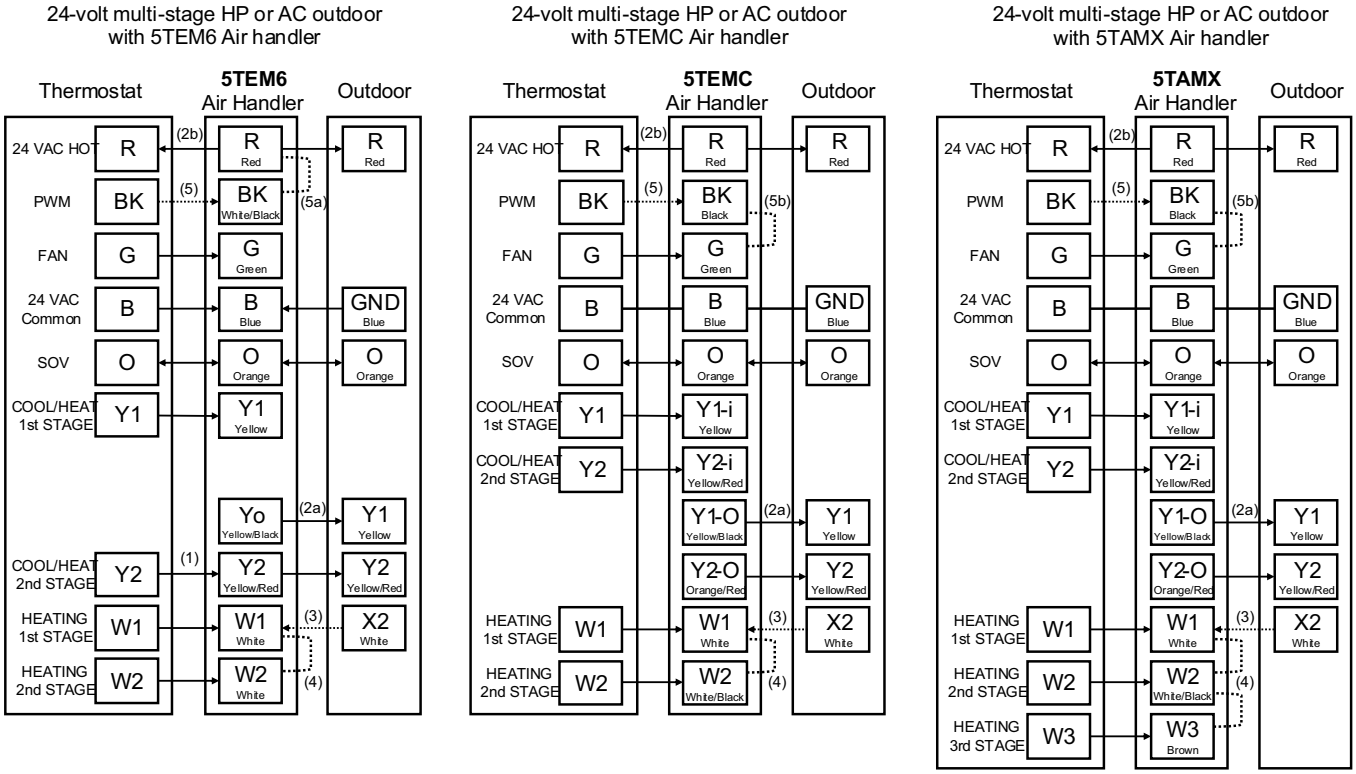

1. Separate Y1 and Y2 at the air handler.
2. Installation options for the condensate switch, float switch, leak detector, etc.:
   a. Break Y1 to the outdoor so the outdoor shuts down but the indoor blower continues to run.
   b. Break R to the thermostat so the entire system shuts down.
3. Do not wire X2 with select Trane thermostats, defrost is communicated to the thermostat via the O signal.
4. Do not jump W terminals together with select Trane thermostats, high stage heat is automatically called during defrost.
5. For BK functionality with select Trane thermostats connect BK and either:
   a. Separate BK from R at the fan control board. Cut and cap both ends of the red/white wire.
   b. Separate BK from G at the air handler harness.

Notes:

- *BK dehumidification reduces indoor airflow when active.*
- *HP models require R and O at the outdoor. AC models do not require O at the outdoor.*
- *Use wire nuts for all pigtail connections and cap all unused wires.*

Sequence of Operation

Control Operational Overview

Operation of the multi-speed outdoor unit is managed and monitored by a micro processor based Control located in the control box of the outdoor unit. This component is also referred to as "The Drive". Heat and Cool signals are sent from the thermostat. System mode and capacity requests are received by the outdoor control and responded to by providing control outputs to the switch-over valve (SOV) solenoid coil, condenser fan motor and compressor.

The AOC has a seven segment display which indicates the mode and any faults detected by the AOC.

Cooling Mode (A/C and Heat Pump)

When a request for cooling capacity is sent from the thermostat to the outdoor unit, the AOC will calculate the required running speed for the compressor and outdoor fan based on the staged signal sent from the thermostat.

Regardless of the requested capacity, the outdoor system will start and ramp to a target startup speed and hold steady for a minimum dwell period to ensure proper oil return. This dwell period will last 90 sec. The startup operation will progress to normal operation once this dwell period is completed. The system can duty cycle as needed to provide the required capacity requested from the thermostat.

As the thermostat increases demand, so will the compressor, outdoor fan and indoor blower speeds to continuously deliver the capacity requested by the thermostat and meet the demand of the structural load.

Heat Pump Cooling Mode of Operation

In addition to stage and demand operating sequences outlined in the Cooling Mode description, when a heat pump system receives a demand message for cooling, the Switch Over Valve (SOV) solenoid will be pulsed to position the valve for cooling. Latching Switch Over Valve (LSOV) technology is standard with multi speed outdoor heat pumps. By utilizing components designed to hold the pilot pin of the SOV in place, the valve will maintain the cooling or heating position even when power is removed. Maintaining valve position, or Latching, is accomplished with the help of a magnet mounted in the solenoid coil or a spring manufactured internal to the SOV. To initiate the SOV position, a 12 Volt DC pulse is sent from the J17 plug located on the IVSC to the solenoid coil at the start of each call for capacity. Polarity of the DC pulse is critical to the direction the valve's pilot pin will be set.

Heat Pump Heating Mode of Operation

In the heating mode, the LSOV will get a DC pulse to position the valve for heating at the start of each call for capacity.

Heat Pump Heating Defrost Mode

When the system is operating in Heat Pump heating and the system initiates a Defrost, the control simultaneously:

- De-energizes the outdoor fan motor,
- Commands the SOV to change to the cooling mode.

There is a brief switchover time-delay (to allow refrigerant pressures to stabilize) before the compressor is commanded to run at Maximum Speed Cooling to perform Defrost.

The thermostat also sends a signal to the indoor unit to run the blower at Cooling airflow and energize auxiliary heat (if equipped). Auxiliary heat blower speed may be higher than Cooling mode and will take precedence during defrost.

The Defrost Mode will be terminated after the OD coil temperature reaches 50°F or the maximum time override of 15 minutes has lapsed. At Defrost termination, the compressor will be commanded to go to the Defrost Switchover Speed. After that speed is achieved, the SOV position will be changed back to the heating mode of operation and the OD fan will be turned back on. Following the refrigerant stabilizing delay, the compressor will be allowed to run at any speed commanded based on the thermostat signal. The defrost termination temperature can be changed to 65°F by clipping the defrost termination jumper (JP1).

Servicing

When Servicing:

- The area shall be checked with an appropriate refrigerant detector prior to and during work, to ensure the technician is aware of potentially toxic or flammable atmospheres.
- Ensure that the leak detection equipment being used is suitable for use with all applicable refrigerants, i.e. non-sparking, adequately sealed or intrinsically safe.
- Work shall be undertaken under a controlled procedure so as to minimise the risk of a flammable gas or vapor being present while the work is being performed.
- If any hot work is to be conducted on the refrigerating equipment or any associated parts, appropriate fire extinguishing equipment shall be available to hand.
- Have a dry powder or CO_2 fire extinguisher adjacent to the servicing area.
- Ensure that the area is in the open or that it is adequately ventilated before breaking into the system or conducting any hot work.

- A degree of ventilation shall continue during the period that the work is carried out. The ventilation should safely disperse any released refrigerant and preferably expel it externally into the atmosphere.

  Important: *The following leak detection methods are deemed acceptable for all refrigerant systems:*

  1. *Electronic leak detectors calibrated for R-454B*
  2. *Bubble method*

  Important: *Under no circumstances shall potential sources of ignition be used in the searching for or detection of refrigerant leaks.*

- If a leak is suspected, all naked flames shall be removed/extinguished.
- If a leakage of refrigerant is found which requires brazing, all of the refrigerant shall be recovered from the system, or isolated (by means of shut off valves) in a part of the system remote from the leak.
- If repairs must be made after system is charged, properly and safely remove or isolate refrigerant and purge the section of the system needing repair with inert gas or oxygen free nitrogen prior to opening the circuit.
- The REFRIGERANT CHARGE shall be recovered into the correctly marked recovery cylinders. Ensure that the outlet for the vacuum pump is not close to any potential ignition sources and that ventilation is available.
- Nitrogen purge chart:

Nitrogen Purge Times				
Flow Rate	**Lineset Length**			
CuFT/Hr	< 50 feet	< 100 feet	< 150 feet	< 200 feet
15	2 Minutes	4 Minutes	6 Minutes	8 Minutes
30	1 Minute	2 Minutes	3 Minutes	4 Minutes
60	1 Minute	1 Minute	2 Minutes	2 Minutes

- Ensure that only appropriate refrigerant recovery cylinders are employed. Ensure that the correct number of cylinders for holding the total system charge is available. Only use cylinders designated for the recovered refrigerant and labelled for that refrigerant. Cylinders shall be complete with pressure-relief valve and associated shut-off valves in good working order.
- A calibrated weighing scale shall be available and in good working order. Hoses shall be complete with leak-free disconnect couplings and in good condition. Ensure any associated electrical components are sealed.
- The recovered refrigerant shall be returned to the refrigerant supplier in the correct recovery cylinder. Do not mix refrigerants.
- If compressors or compressor oils are to be removed, ensure that they have been evacuated to an acceptable level to make certain that FLAMMABLE REFRIGERANT does not remain within the lubricant.

Defrost Control (Heat Pump only)

Demand Defrost

The demand defrost control measures heat pump outdoor ambient temperature with a sensor located outside the outdoor coil. A second sensor located on the outdoor coil is used to measure the coil temperature. The difference between the ambient and the colder coil temperature is the difference or delta-T measurement. This delta-T measurement is representative of the operating state and relative capacity of the heat pump system. By measuring the change in delta-T, we can determine the need for defrost. The coil sensor also serves to sense outdoor coil temperature for termination of the defrost cycle.

Defrost Initiation

The calculated temperature difference between the outdoor temperature sensor and the coil temperature sensor is called Delta T. Defrost can occur once the current Delta T exceeds the Delta T initiate value. This adaptive logic assures a complete defrost for a range of outdoor temperatures.

Defrost Enabled

Demand Defrost is enabled with the following inputs to the AOC:

- Outdoor ambient temperature sensor (ODS-B) reporting an outdoor temperature at or below 52° F.
- Coil temperature sensor (CBS) reporting a coil temperature at or below 35° F.

Notes:

- *A forced Defrost test can be entered through the AOC Forced Defrost Button (hold for at least 5 seconds).*
- *Heating must be running for approximately 8 minutes before a defrost test will be available.*
- *Indoor heat will turn on if running a forced defrost test.*

Sensors

J22 Compressor Discharge Temperature

This table shows the corresponding voltage, resistance and temperature readings for the Dome Temperature Sensor when measured across pins J22. The power source for the Dome Temperature Sensor is 3.2VDC.

Table 6. J22 compressor discharge temperature

Temp F	*Temp C*	*Thermistor Resistance (OHMS)*	*VOLTS DC (Pin to Pin)*
-15	-26.11	139453	3.13
-10	-23.33	118062	3.11
-5	-20.56	100258	3.10
0	-17.78	85393	3.08
5	-15.00	72944	3.06
10	-12.22	62487	3.04
15	-9.44	53676	3.02
20	-6.67	46232	2.99
25	-3.89	39925	2.96
30	-1.11	34567	2.93
35	1.67	30003	2.89
40	4.44	26105	2.85
45	7.22	22767	2.80
50	10.00	19903	2.75
55	12.78	17438	2.70
60	15.56	15312	2.64
65	18.33	13475	2.58
70	21.11	11883	2.51
75	23.89	10501	2.45
80	26.67	9298	2.37
85	29.44	8249	2.30
90	32.22	7333	2.22
95	35.00	6530	2.14
100	37.78	5826	2.06
105	40.56	5208	1.97
110	43.33	4663	1.89
115	46.11	4182	1.80
120	48.89	3758	1.72
125	51.67	3382	1.63
130	54.44	3048	1.55
135	57.22	2752	1.47
140	60.00	2488	1.39
145	62.78	2253	1.31
150	65.56	2043	1.24
155	68.33	1856	1.17
160	71.11	1688	1.10
165	73.89	1537	1.03
170	76.67	1402	0.97
175	79.44	1280	0.91
180	82.22	1170	0.85
185	85.00	1071	0.80
190	87.78	982	0.74
195	90.56	901	0.70
200	93.33	828	0.65
205	96.11	762	0.61
210	98.89	702	0.57
215	101.67	647	0.53
220	104.44	597	0.50
225	107.22	552	0.47
230	110.00	511	0.44
235	112.78	473	0.41
240	115.56	438	0.38
245	118.33	407	0.36

Table 6. J22 compressor discharge temperature (continued)

Temp F	*Temp C*	*Thermistor Resistance (OHMS)*	*VOLTS DC (Pin to Pin)*
250	121.11	378	0.33
255	123.89	351	0.31
260	126.67	327	0.29
265	129.44	304	0.27
270	132.22	284	0.26
275	135.00	265	0.24
280	137.78	247	0.23
285	140.56	231	0.21
290	143.33	216	0.20
295	146.11	203	0.19
300	148.89	190	0.18
305	151.67	178	0.17
310	154.44	167	0.16
315	157.22	157	0.15
320	160.00	148	0.14
325	162.78	139	0.13
330	165.56	131	0.12

A working Compressor Discharge Temperature Sensor is required for:

- Protection (High/Low Temperature)
- Preheating (Sump Heat)
- Outdoor EEV Control

The Discharge Temperature Sensor control contains an NTC thermistor input for sensing the Compressor Discharge Temperature. The thermistor has a nominal resistance of ≈ 10k ohms at 75°F. The minimum range required for the Discharge Temperature input is —31°F to 302°F. when measured across pins J22.

Note: *Secure Installation of Discharge Sensor is required for reliable compressor & system operation.*

J21 Ambient Temperature Sensor (ODS)

These tables show the corresponding voltage, resistance and temperature readings for the Ambient, Temperature Sensor when measured across pins 5 & 14.
The power source for the Ambient, Coil and Suction Temperature sensors is 3.2VDC

Table 7. J21 ambient temperature sensors

Temp F	*Temp C*	*Thermistor Resistance (OHMS)*	*VOLTS DC (Pin to Pin)*
-15	-26.11	135976	2.43
-10	-23.33	115112	2.33
-5	-20.56	97745	2.22
0	-17.78	83247	2.11
5	-15.00	71108	1.99
10	-12.22	60916	1.87
15	-9.44	52334	1.75
20	-6.67	45088	1.63
25	-3.89	38952	1.52

Table 7. J21 ambient temperature sensors (continued)

Temp F	Temp C	Thermistor Resistance (OHMS)	VOLTS DC (Pin to Pin)
30	-1.11	33742	1.40
35	1.67	29307	1.29
40	4.44	25520	1.19
45	7.22	22280	1.09
50	10.00	19499	1.00
55	12.78	17108	0.91
60	15.56	15045	0.83
65	18.33	13262	0.75
70	21.11	11717	0.68
75	23.89	10375	0.62
80	26.67	9207	0.56
85	29.44	8188	0.51
90	32.22	7297	0.46
95	35.00	6516	0.42
100	37.78	5830	0.38
105	40.56	5227	0.35
110	43.33	4695	0.31
115	46.11	4224	0.29
120	48.89	3808	0.26
125	51.67	3439	0.24
130	54.44	3111	0.21
135	57.22	2820	0.20
140	60.00	2559	0.18

The Ambient Temperature Sensor control has an NTC thermistor input for sensing the outdoor air temperature and has a nominal resistance of ≈ 10k ohms at 75°F. The Ambient Temperature is measured on J21 header. The minimum range required for the Ambient Temperature Sensor is —40°F to 140°F.

A working Ambient Temperature Sensor is required for the following:

- Defrost (Heat Pump)
- Oil Management
- OD EEV Startup Position
- Pre Heating (Sump Heat)
- Normal Operation of the OD Fan

J23 Coil Temperature Sensor

Table 8. J23 coil temperature

Temp F	Temp C	Thermistor Resistance (OHMS)	VOLTS DC (Pin to Pin)
-15	-26.11	135976	2.71
-10	-23.33	115112	2.64
-5	-20.56	97745	2.56
0	-17.78	83247	2.48
5	-15.00	71108	2.38
10	-12.22	60916	2.29
15	-9.44	52334	2.19
20	-6.67	45088	2.08
25	-3.89	38952	1.97
30	-1.11	33742	1.86
35	1.67	29307	1.75
40	4.44	25520	1.64
45	7.22	22280	1.53
50	10.00	19499	1.42
55	12.78	17108	1.32
60	15.56	15045	1.22
65	18.33	13262	1.13
70	21.11	11717	1.04
75	23.89	10375	0.96
80	26.67	9207	0.88
85	29.44	8188	0.81
90	32.22	7297	0.74
95	35.00	6516	0.68
100	37.78	5830	0.62
105	40.56	5227	0.57
110	43.33	4695	0.52
115	46.11	4224	0.47
120	48.89	3808	0.43
125	51.67	3439	0.40
130	54.44	3111	0.36
135	57.22	2820	0.33
140	60.00	2559	0.30

The Coil Temperature Sensor control has an NTC thermistor input for sensing the coil temperature. This reading is used by the defrost algorithm on heat pump units. The thermistor has a nominal resistance of 10k ohms at 75°F. The minimum range and resolutions as measured across the J23 header required for Coil Temperature Sensor is —50°F to 150°F.

A working Coil Temperature Sensor is required for the following:

- Defrost Initiation and Termination
- Compressor Sump Heat (Preheating)

Refrigeration Circuits for Heating and Cooling

Heating Models

Figure 12. 2 ton and 3 ton HP

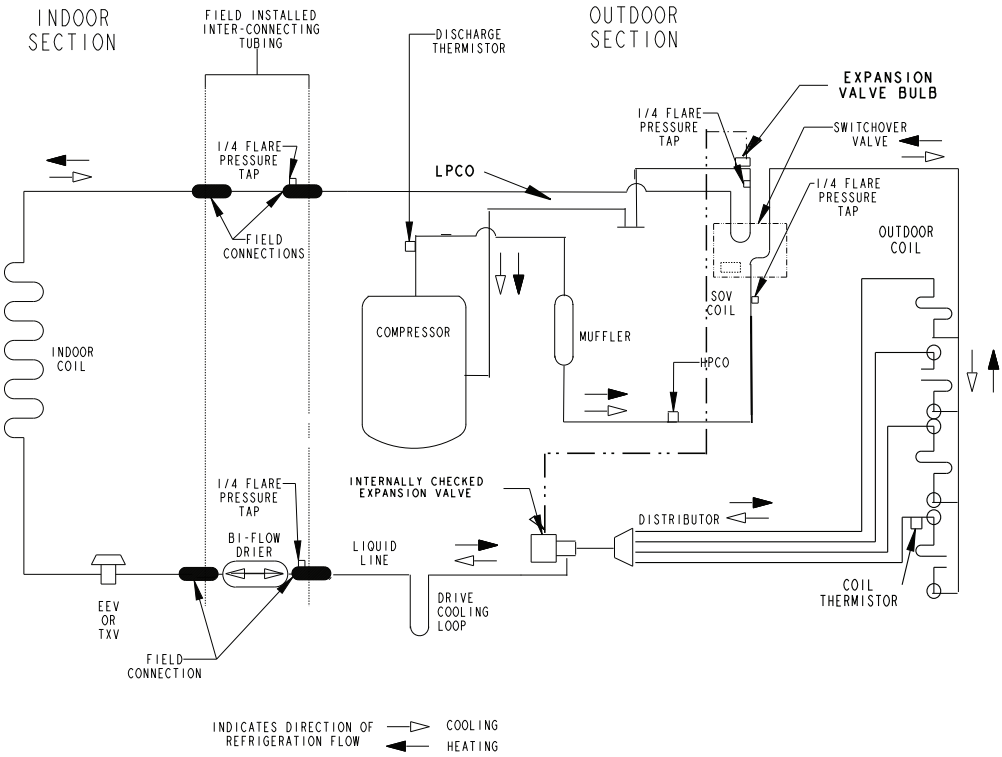

Figure 13. 4 ton and 5 ton HP

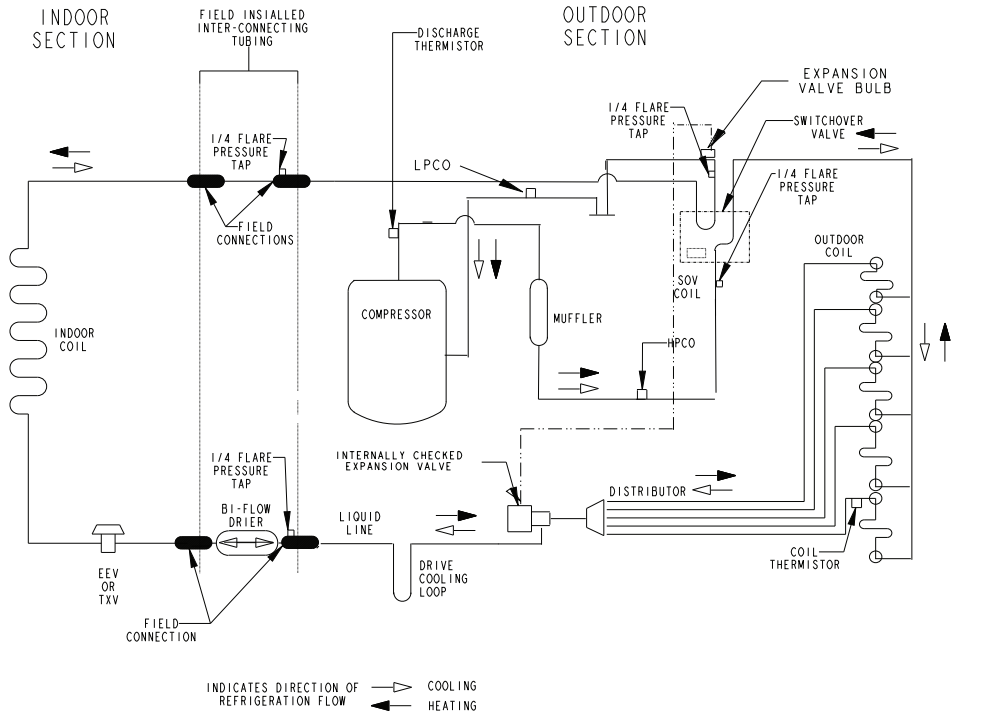

Cooling Models

Figure 14. 2 ton and 3 ton A/C

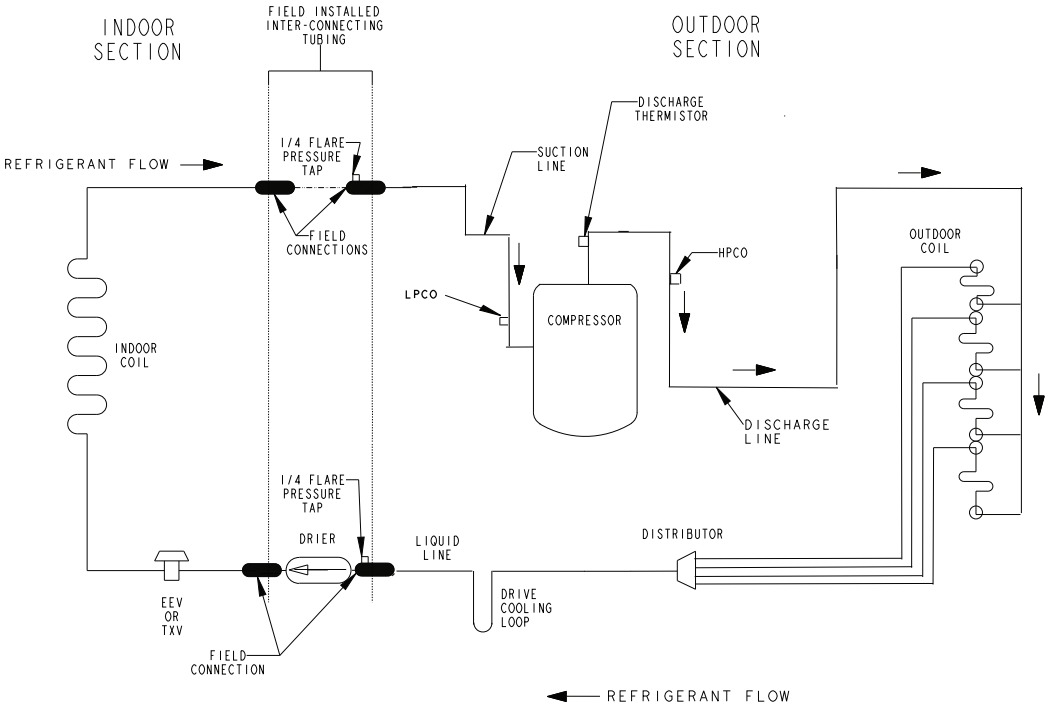

Figure 15. 4 ton and 5 ton A/C

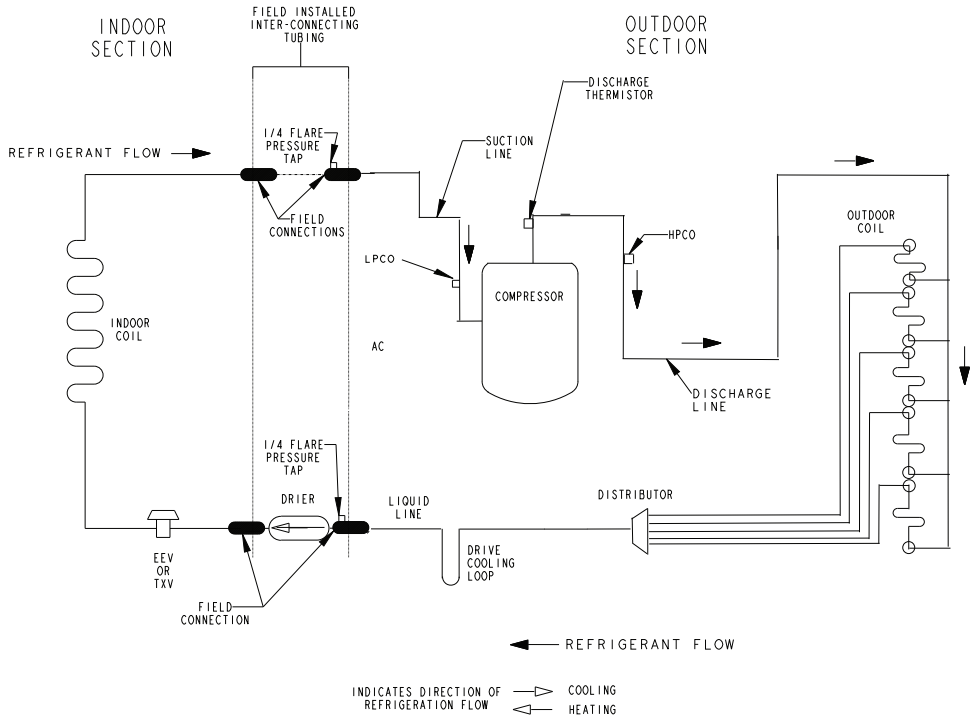

Communication Loss

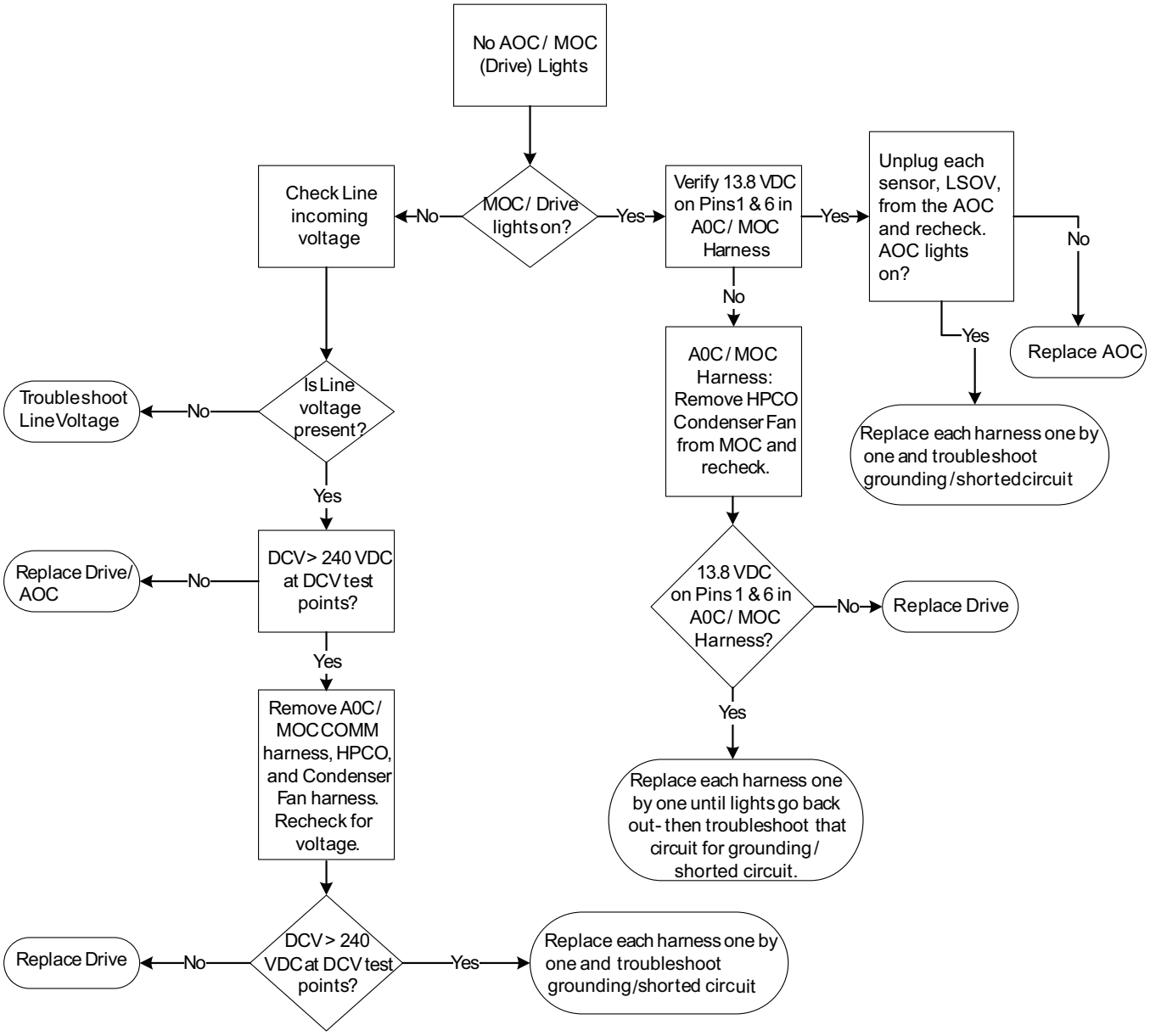

Breaker Trip Procedure

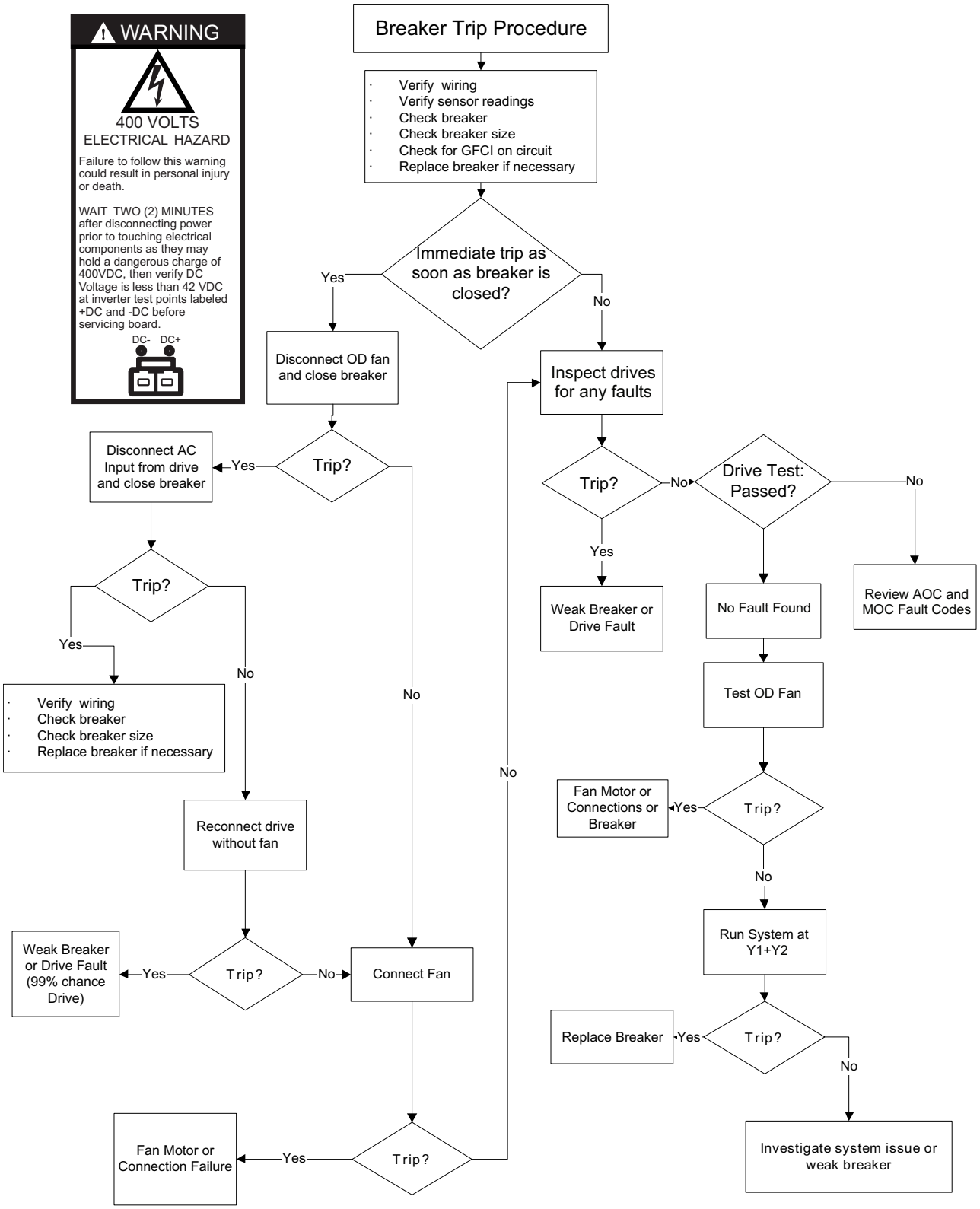

Start Compressor

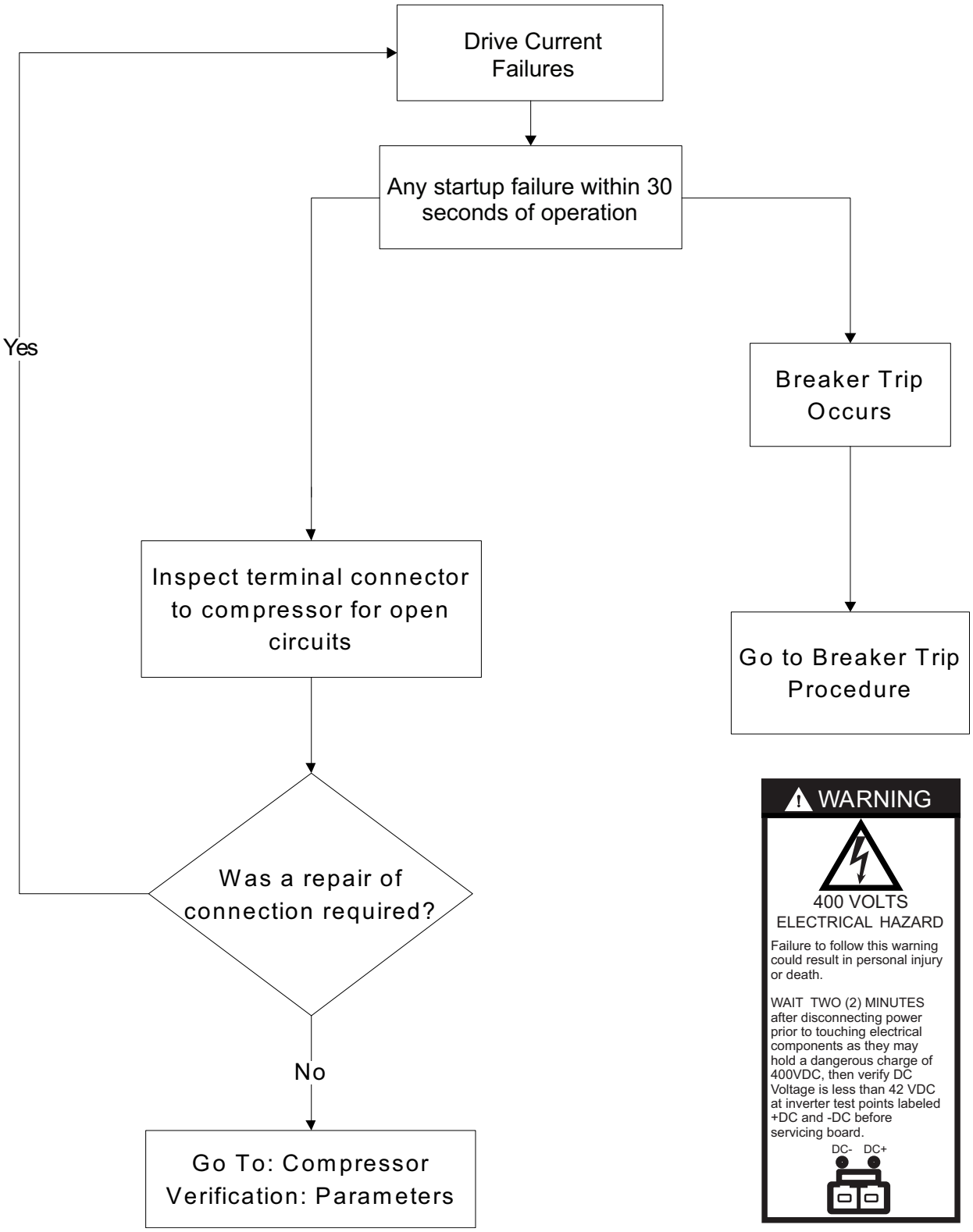

Compressor Verification: Parameters

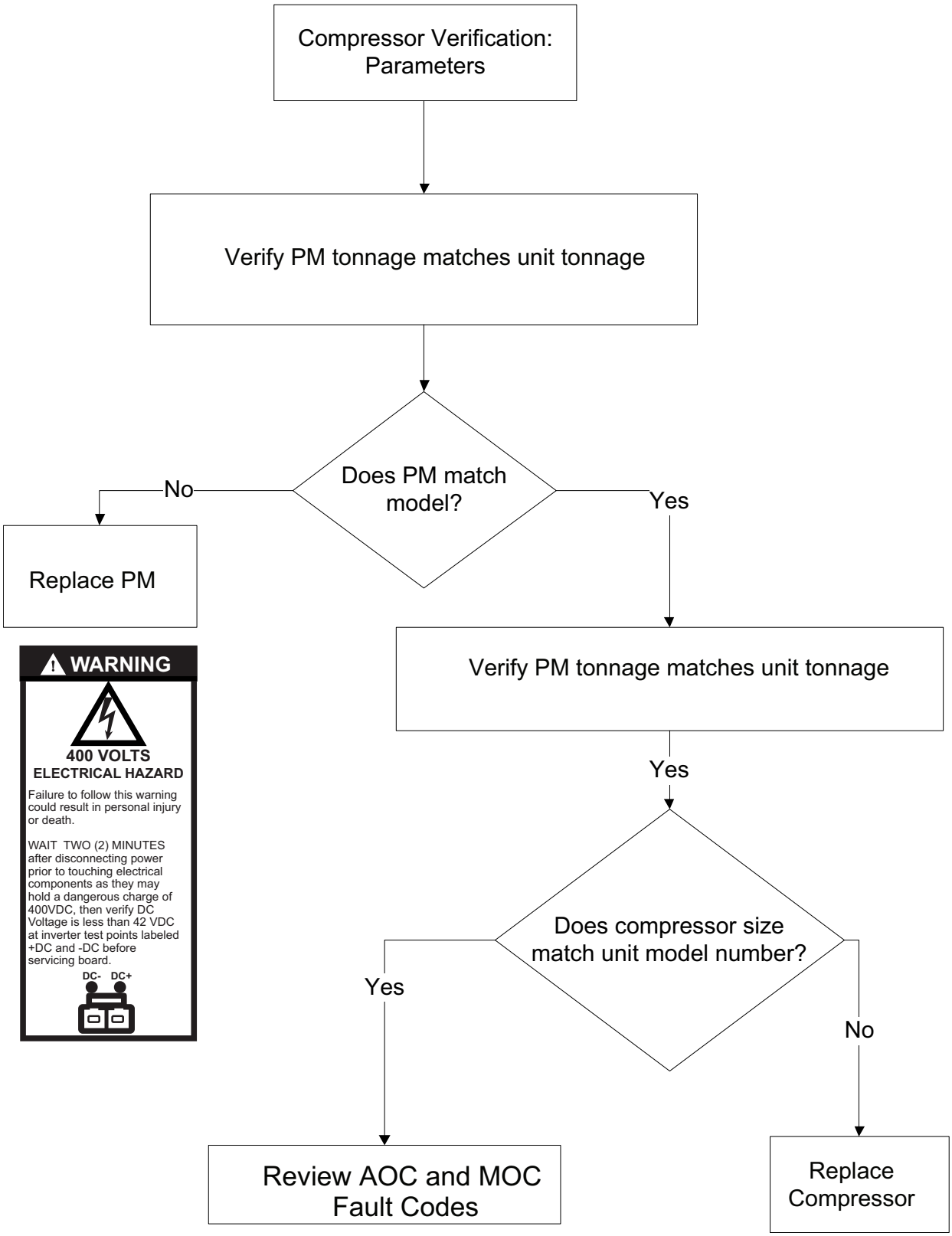

Compressor Verification: Short

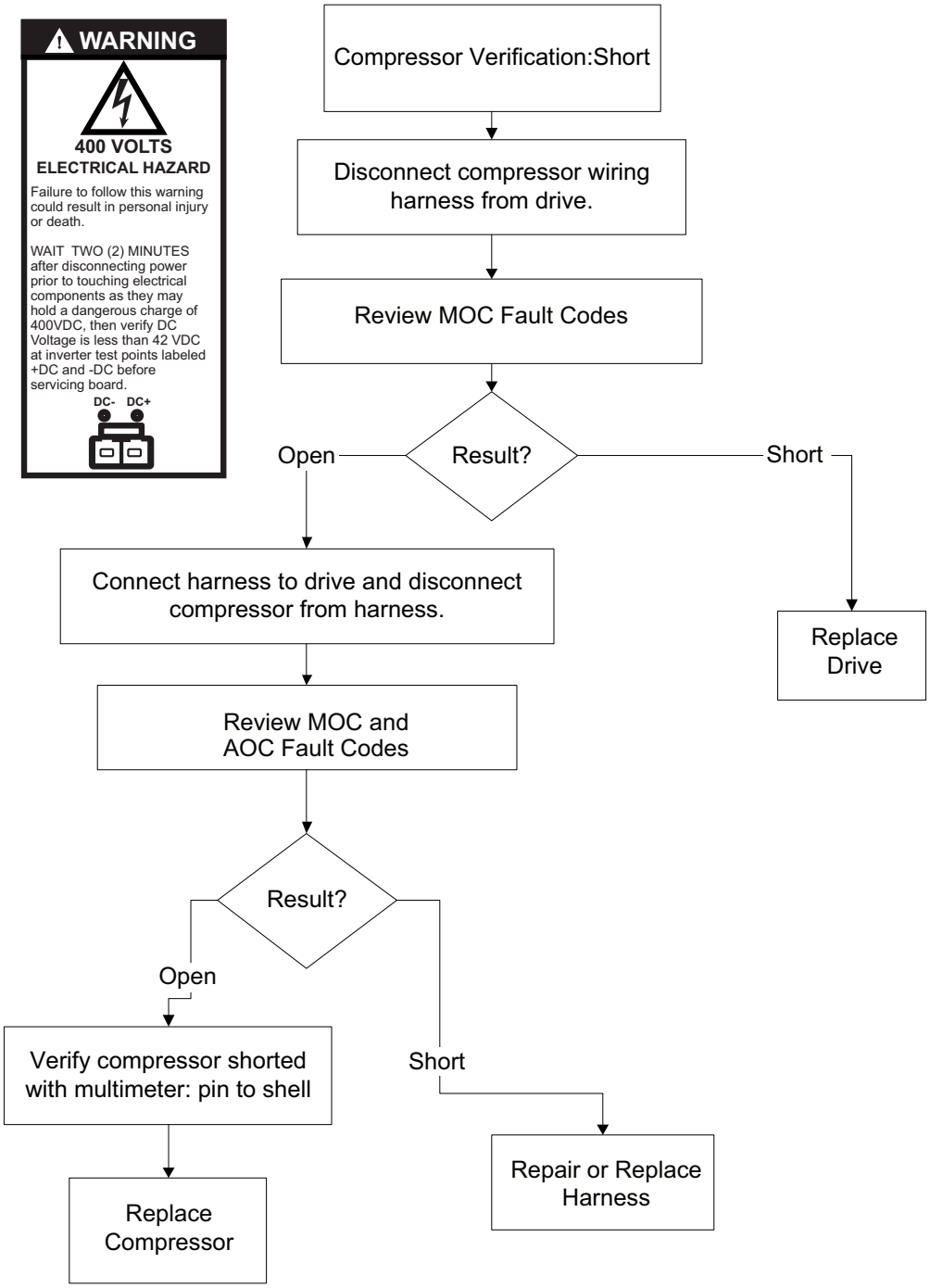

Compressor Verification: Open

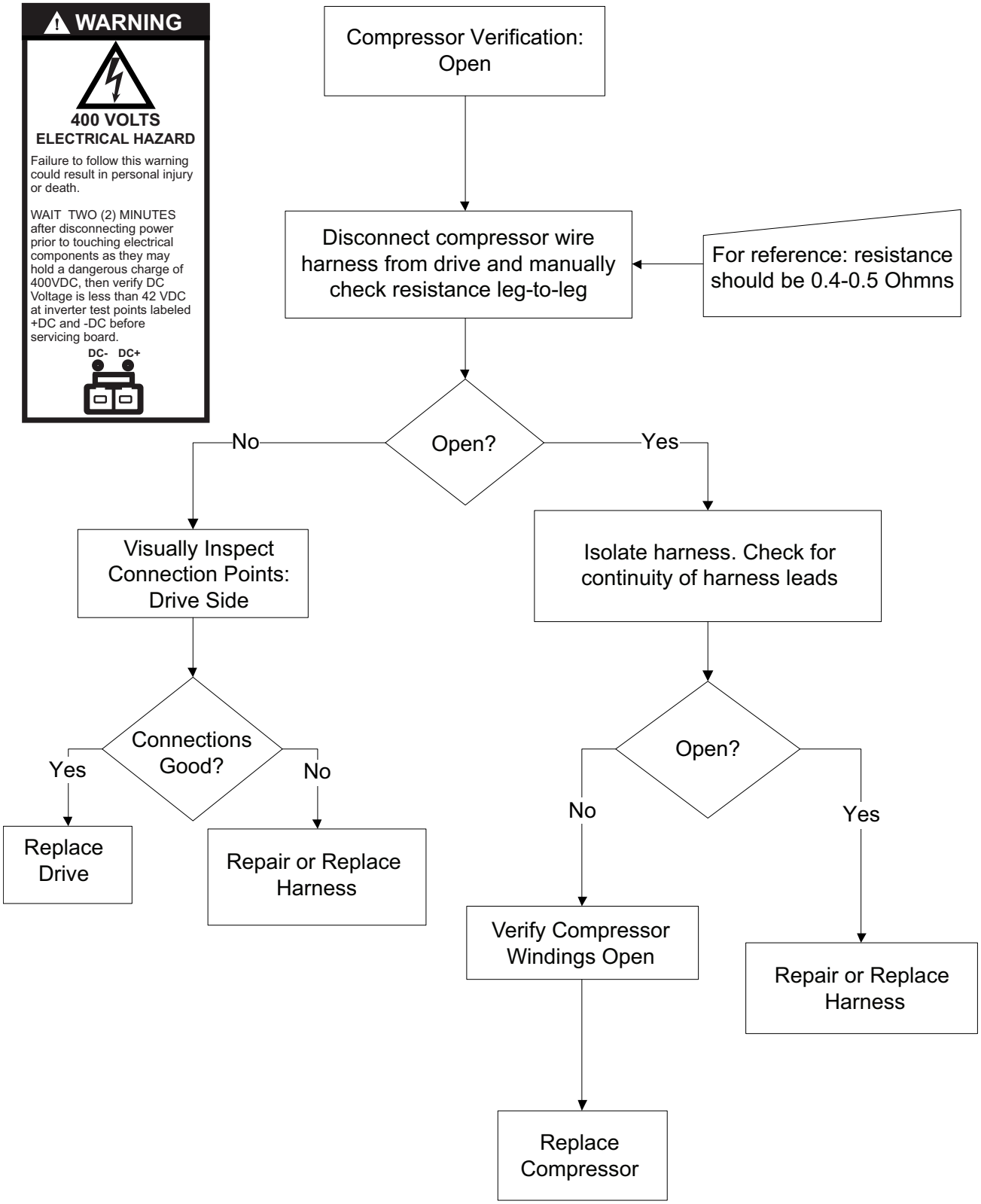

Inverter Temperature

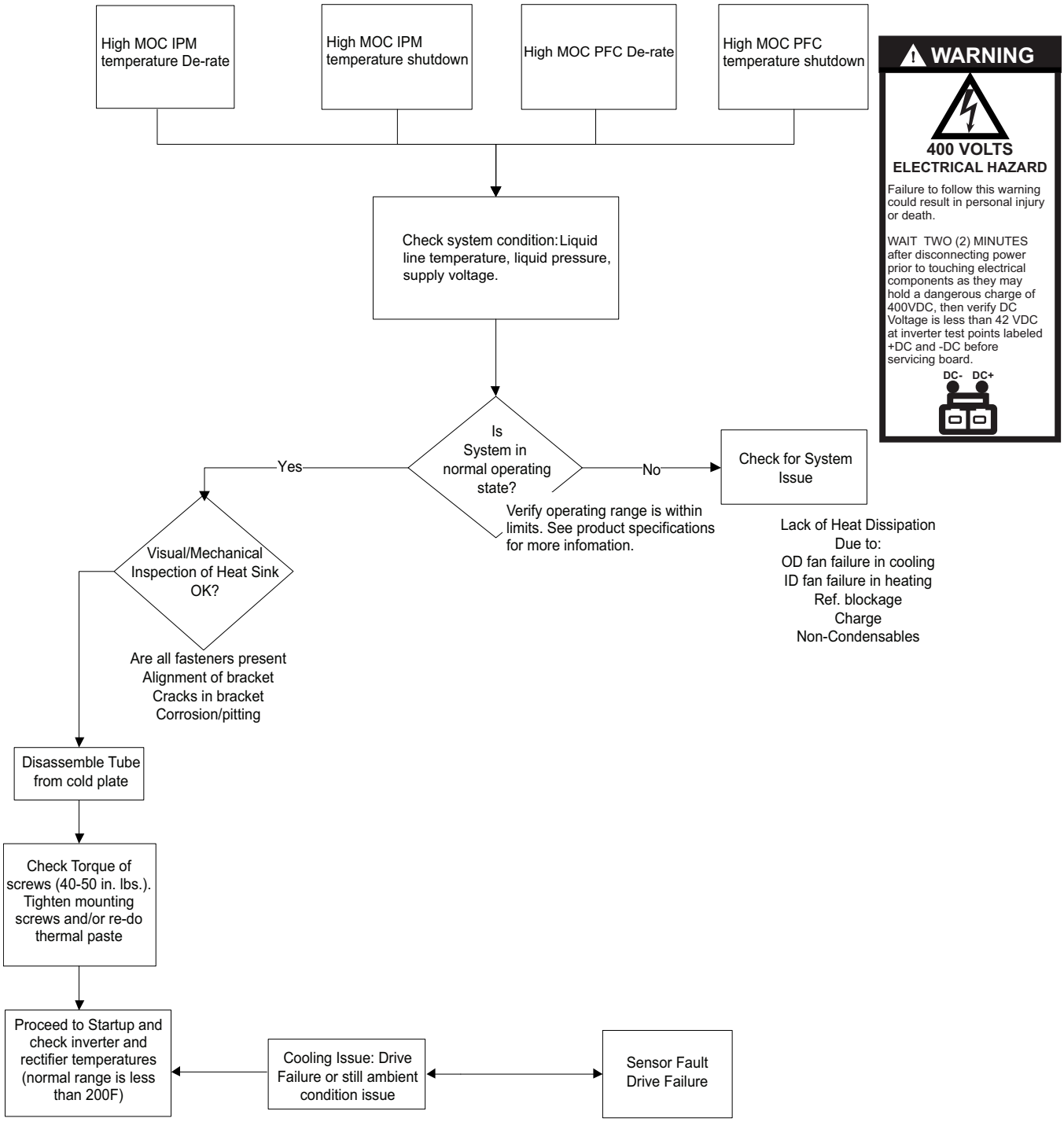

Sound Data

Table 9. Sound data - models 5TWX7024A, 5TWX7036A, 5TWX7048A, and 5TWX7060A

Model	Mode	Speed	A-Weighted Sound Power Level [dB (A)]	Full Octave Sound Power [dB]							
				63 Hz	125 Hz	250 Hz	500 Hz	1000 Hz	2000 Hz	4000 Hz	8000 Hz
5TWX7024A	Cool	Min	63	57.7	59.1	56.8	59.4	59.5	53.6	45.1	43.8
	Cool	Max	71	49.1	70.4	63.7	65.5	68.4	63.4	53.2	49.7
	Heat	Min	69	56.7	60.7	58.1	62.8	66.1	60.9	51.7	49.0
	Heat	Max	73	76.0	74.8	68.0	68.1	69.7	64.5	56.6	55.1
5TWX7036A	Cool	Min	67	69.5	58.8	56.2	60.1	59.5	63.5	46.1	47.4
	Cool	Max	72	76.0	69.1	64.5	67.1	69.7	63.6	53.6	52.6
	Heat	Min	72	87.4	71.1	66.5	68.6	68.5	61.7	52.8	52.6
	Heat	Max	75	76.0	73.8	67.6	70.9	71.4	65.0	56.1	53.6
5TWX7048A	Cool	Min	70	69.5	71.0	66.2	70.1	64.1	57.7	55.7	48.8
	Cool	Max	75	76.0	79.8	75.0	74.3	69.1	63.0	61.3	53.7
	Heat	Min	72	87.4	72.3	72.3	69.2	67.2	61.2	60.2	52.5
	Heat	Max	75	76.0	79.8	75.0	74.3	69.1	63.0	61.3	53.7
5TWX7060A	Cool	Min	70	69.5	71.0	66.2	70.1	64.1	57.7	55.7	48.8
	Cool	Max	75	76.0	79.8	75.0	74.3	69.1	63.0	61.3	53.7
	Heat	Min	72	87.4	72.3	72.3	69.2	67.2	61.2	60.2	52.5
	Heat	Max	75	76.0	79.8	75.0	74.3	69.1	63.0	61.3	53.7

Note: *Rated in accordance with AHRI Standard 270.*

Table 10. Sound data - models 5TTX7024A, 5TTX7036A, 5TTX7048A, and 5TTX7060A

Model	Mode	Speed	A-Weighted Sound Power Level [dB (A)]	Full Octave Sound Power [dB]							
				63 Hz	125 Hz	250 Hz	500 Hz	1000 Hz	2000 Hz	4000 Hz	8000 Hz
5TTX7024A	Cool	Min	63	57.7	59.1	56.8	59.4	59.5	53.6	45.1	43.8
	Cool	Max	71	49.1	70.4	63.7	65.5	68.4	63.4	53.2	49.7
5TTX7036A	Cool	Min	67	69.5	58.8	56.2	60.1	59.5	63.5	46.1	47.4
	Cool	Max	72	76.0	69.1	64.5	67.1	69.7	63.6	53.6	52.6
5TTX7048A	Cool	Min	70	69.5	71.0	66.2	70.1	64.1	57.7	55.7	48.8
	Cool	Max	75	76.0	79.8	75.0	74.3	69.1	63.0	61.3	53.7
5TTX7060A	Cool	Min	70	69.5	71.0	66.2	70.1	64.1	57.7	55.7	48.8
	Cool	Max	75	76.0	79.8	75.0	74.3	69.1	63.0	61.3	53.7

Note: *Rated in accordance with AHRI Standard 270.*

Pressure Curves

Figure 16. 2 Ton HP (024 Models)

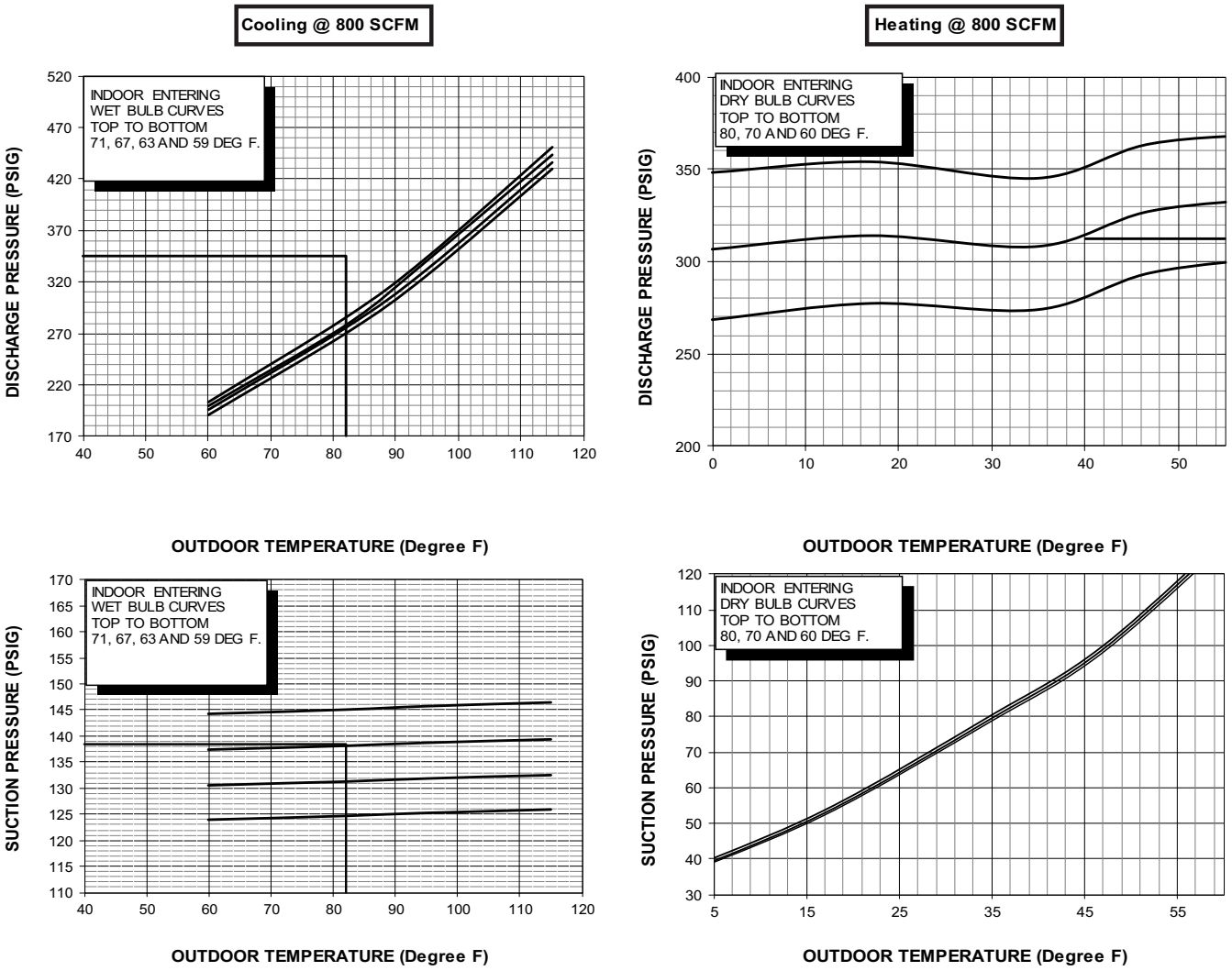

COOLING PERFORMANCE CAN BE CHECKED WHEN THE OUTDOOR TEMP IS ABOVE 55F.
* WHEN USING PRESSURE CURVES TO VERIFY TYPICAL PERFORMANCE, ALWAYS RUN THE SYSTEM WITH ONE OF THE TEST MODES FOUND IN THE 950/850 COMFORT CONTROL. CHARGING MODE - COOLING OR CHECK CHARGE MODE - HEATING.

TO CHECK COOLING PERFORMANCE, SELECT THE PROPER INDOOR CFM, ALLOW PRESSURES TO STABLIZE. MEASURE INDOOR WET BULB TEMPERATURE, OUTDOOR TEMPERATURE, LIQUID AND SUCTION PRESSURES. ON THE PLOTS, LOCATE OUTDOOR TEMPERATURE (1); LOCATE INDOOR WET BULB (2); FIND INTERSECTION OF OD TEMP. & ID W.B. (3); READ DISCHARGE (4) OR SUCTION PRESSURE (5) IN LEFT COLUMN.

THE HEATING CHARTS REPRESENT INDOOR ENTERING DRY BULB CURVES (TOP TO BOTTOM ARE 80, 70, AND 60 DEG F).
THE COOLING CHARTS REPRESENT INDOOR ENTERING WET BULB CURVES (TOP TO BOTTOM ARE 71, 67, 63, AND 59 DEG. F)

ACTUAL:
DISCHARGE AND LIQUID PRESSURE SHOULD BE +/- 10 PSI OF CHART
SUCTION PRESSURE SHOULD BE +/- 3 PSIG OF CHART

RATED INTERCONNECTING LINES
GAS - 5/8” O.D.
LIQUID - 5/16”

DWG. NO. 5TWX7024A

Pressure Curves

Figure 17. 3 Ton HP (036 Models)

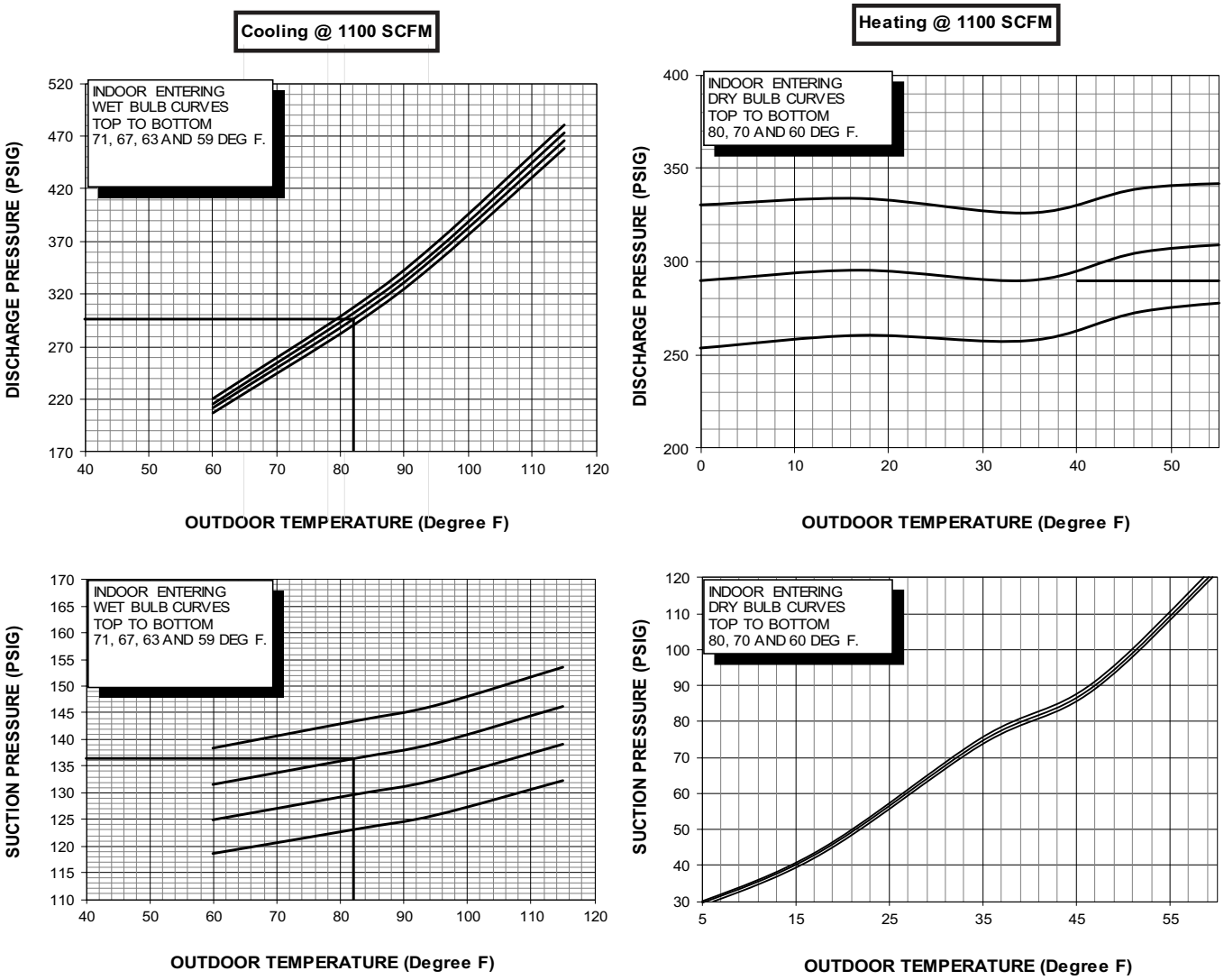

COOLING PERFORMANCE CAN BE CHECKED WHEN THE OUTDOOR TEMP IS ABOVE 55F.
* WHEN USING PRESSURE CURVES TO VERIFY TYPICAL PERFORMANCE, ALWAYS RUN THE SYSTEM WITH ONE OF THE TEST MODES FOUND IN THE 950/850 COMFORT CONTROL. CHARGING MODE - COOLING OR CHECK CHARGE MODE - HEATING.

TO CHECK COOLING PERFORMANCE, SELECT THE PROPER INDOOR CFM, ALLOW PRESSURES TO STABLIZE. MEASURE INDOOR WET BULB TEMPERATURE, OUTDOOR TEMPERATURE, LIQUID AND SUCTION PRESSURES. ON THE PLOTS, LOCATE OUTDOOR TEMPERATURE (1); LOCATE INDOOR WET BULB (2); FIND INTERSECTION OF OD TEMP. & ID W.B. (3); READ DISCHARGE (4) OR SUCTION PRESSURE (5) IN LEFT COLUMN.

THE HEATING CHARTS REPRESENT INDOOR ENTERING DRY BULB CURVES (TOP TO BOTTOM ARE 80, 70, AND 60 DEG F).
THE COOLING CHARTS REPRESENT INDOOR ENTERING WET BULB CURVES (TOP TO BOTTOM ARE 71, 67, 63, AND 59 DEG. F)

ACTUAL:
DISCHARGE AND LIQUID PRESSURE SHOULD BE +/- 10 PSI OF CHART
SUCTION PRESSURE SHOULD BE +/- 3 PSIG OF CHART

RATED INTERCONNECTING LINES
GAS - 5/8” O.D.
LIQUID - 5/16”

DWG. NO. 5TWX7036A

Figure 18. 4 Ton HP (048 Models)

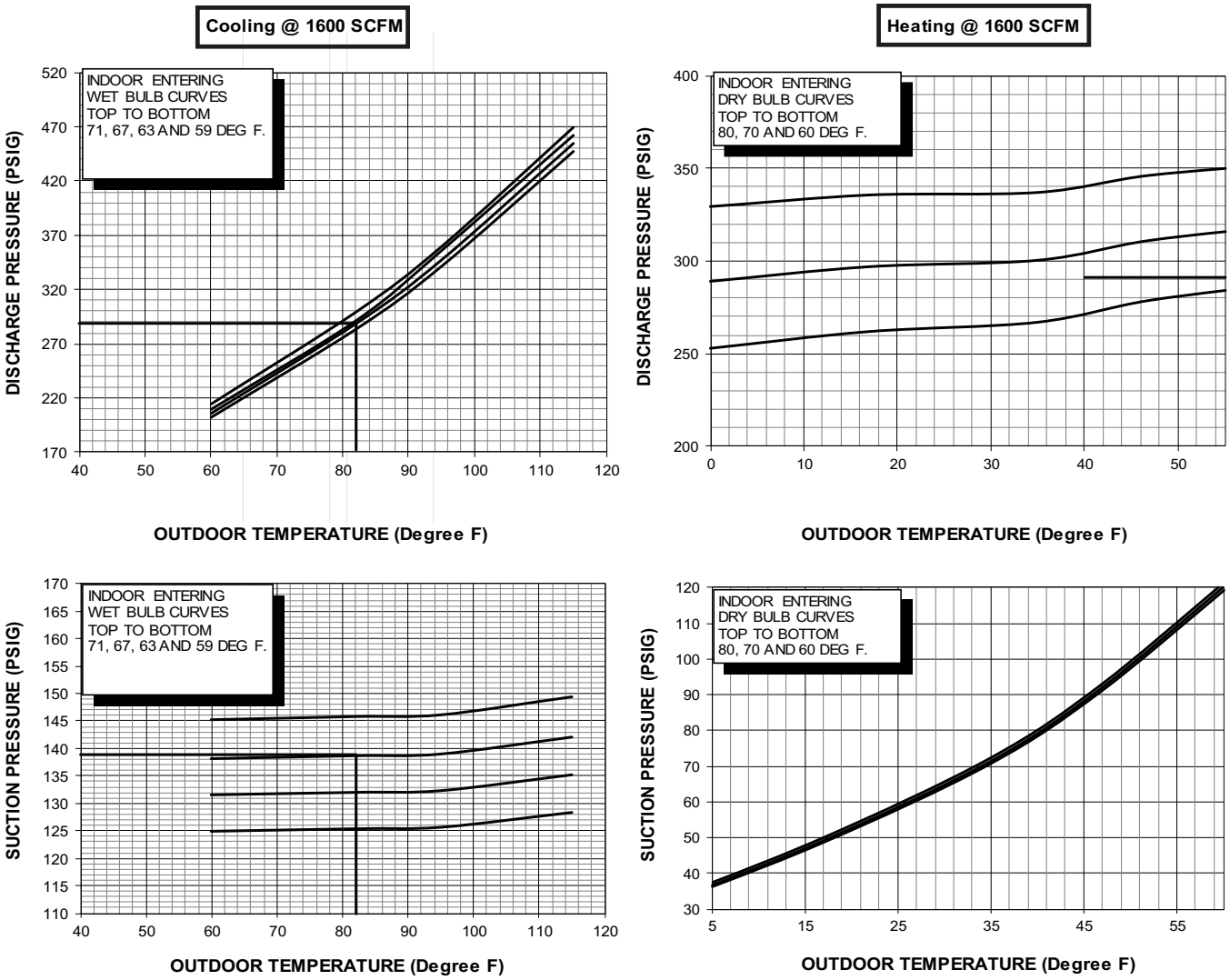

COOLING PERFORMANCE CAN BE CHECKED WHEN THE OUTDOOR TEMP IS ABOVE 55F.
* WHEN USING PRESSURE CURVES TO VERIFY TYPICAL PERFORMANCE, ALWAYS RUN THE SYSTEM WITH ONE OF THE TEST MODES FOUND IN THE 950/850 COMFORT CONTROL. CHARGING MODE - COOLING OR CHECK CHARGE MODE - HEATING.

TO CHECK COOLING PERFORMANCE, SELECT THE PROPER INDOOR CFM, ALLOW PRESSURES TO STABLIZE. MEASURE INDOOR WET BULB TEMPERATURE, OUTDOOR TEMPERATURE, LIQUID AND SUCTION PRESSURES. ON THE PLOTS, LOCATE OUTDOOR TEMPERATURE (1); LOCATE INDOOR WET BULB (2); FIND INTERSECTION OF OD TEMP. & ID W.B. (3); READ DISCHARGE (4) OR SUCTION PRESSURE (5) IN LEFT COLUMN.

THE HEATING CHARTS REPRESENT INDOOR ENTERING DRY BULB CURVES (TOP TO BOTTOM ARE 80, 70, AND 60 DEG F).
THE COOLING CHARTS REPRESENT INDOOR ENTERING WET BULB CURVES (TOP TO BOTTOM ARE 71, 67, 63, AND 59 DEG. F)

ACTUAL:
DISCHARGE AND LIQUID PRESSURE SHOULD BE +/- 10 PSI OF CHART
SUCTION PRESSURE SHOULD BE +/- 3 PSIG OF CHART

RATED INTERCONNECTING LINES
GAS - 5/8” O.D.
LIQUID - 5/16”

DWG. NO. 5TWX7048A

Pressure Curves

Figure 19. 5 Ton HP (060 Models)

Cooling @ 1600 SCFM

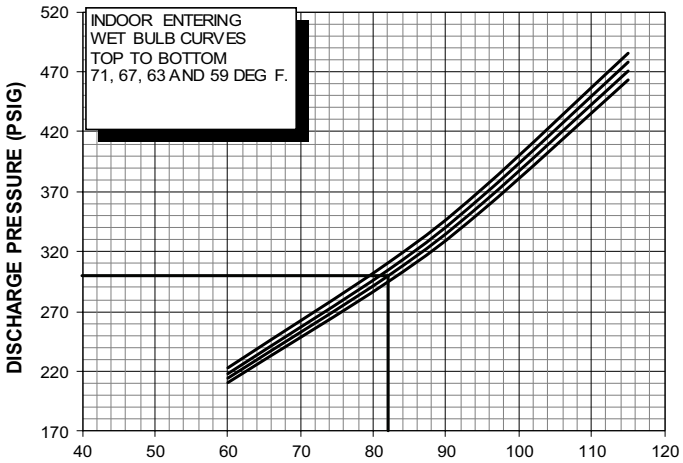

OUTDOOR TEMPERATURE (Degree F)

Heating @ 1600 SCFM

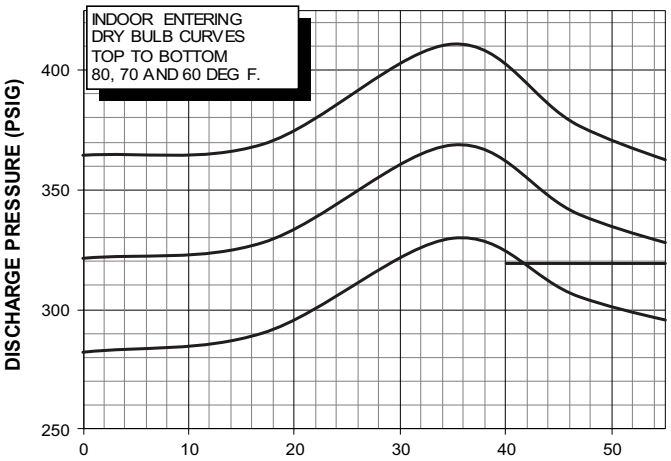

OUTDOOR TEMPERATURE (Degree F)

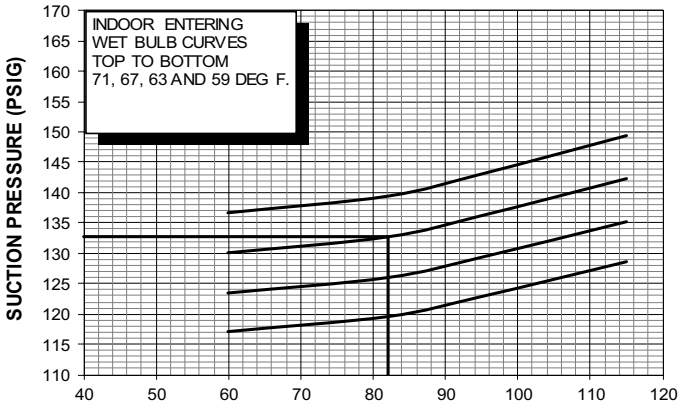

OUTDOOR TEMPERATURE (Degree F)

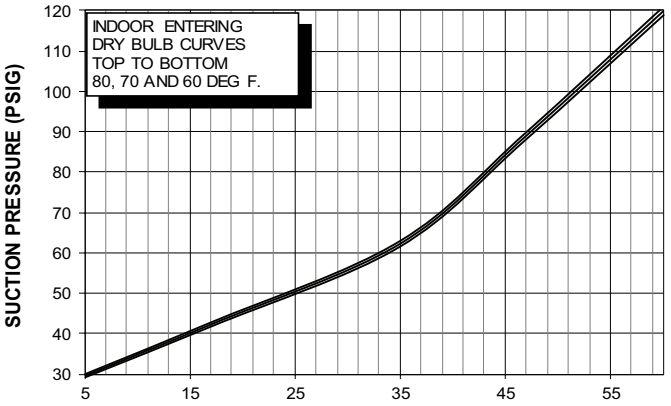

OUTDOOR TEMPERATURE (Degree F)

COOLING PERFORMANCE CAN BE CHECKED WHEN THE OUTDOOR TEMP IS ABOVE 55F.
* WHEN USING PRESSURE CURVES TO VERIFY TYPICAL PERFORMANCE, ALWAYS RUN THE SYSTEM WITH ONE OF THE TEST MODES FOUND IN THE 950/850 COMFORT CONTROL. CHARGING MODE - COOLING OR CHECK CHARGE MODE - HEATING.

TO CHECK COOLING PERFORMANCE, SELECT THE PROPER INDOOR CFM, ALLOW PRESSURES TO STABLIZE. MEASURE INDOOR WET BULB TEMPERATURE, OUTDOOR TEMPERATURE, LIQUID AND SUCTION PRESSURES. ON THE PLOTS, LOCATE OUTDOOR TEMPERATURE (1); LOCATE INDOOR WET BULB (2); FIND INTERSECTION OF OD TEMP. & ID W.B. (3); READ DISCHARGE (4) OR SUCTION PRESSURE (5) IN LEFT COLUMN.

THE HEATING CHARTS REPRESENT INDOOR ENTERING DRY BULB CURVES (TOP TO BOTTOM ARE 80, 70, AND 60 DEG F).
THE COOLING CHARTS REPRESENT INDOOR ENTERING WET BULB CURVES (TOP TO BOTTOM ARE 71, 67, 63, AND 59 DEG. F)

ACTUAL:
DISCHARGE AND LIQUID PRESSURE SHOULD BE +/- 10 PSI OF CHART
SUCTION PRESSURE SHOULD BE +/- 3 PSIG OF CHART

RATED INTERCONNECTING LINES
GAS - 5/8” O.D.
LIQUID - 5/16”

DWG. NO. 5TWX7060A

Figure 20. 2 Ton AC (024 Models)

Cooling @ 800 SCFM

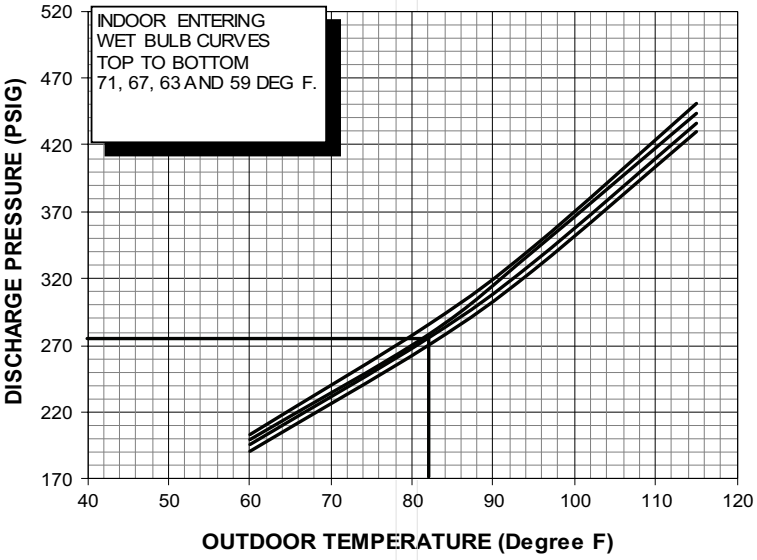

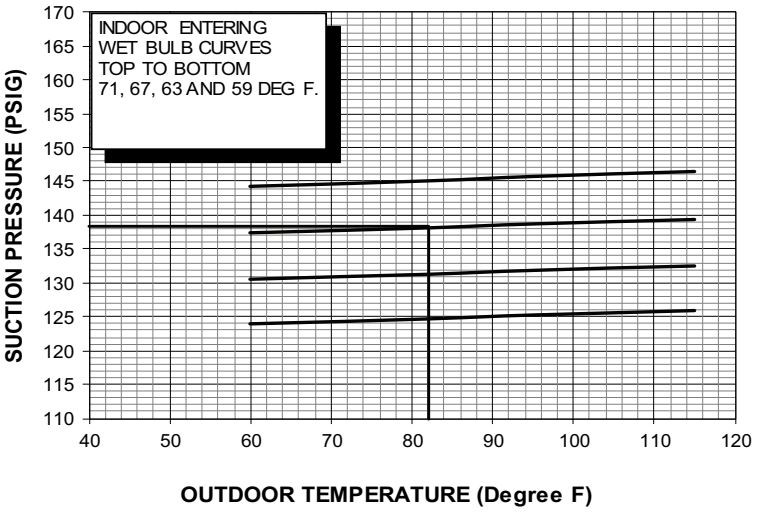

COOLING PERFORMANCE CAN BE CHECKED WHEN THE OUTDOOR TEMP IS ABOVE 55F.
* WHEN USING PRESSURE CURVES TO VERIFY TYPICAL PERFORMANCE, ALWAYS RUN THE SYSTEM WITH ONE OF THE TEST MODES FOUND IN THE 950/850 COMFORT CONTROL. CHARGING MODE - COOLING OR CHECK CHARGE MODE - HEATING.

TO CHECK COOLING PERFORMANCE, SELECT THE PROPER INDOOR CFM, ALLOW PRESSURES TO STABLIZE. MEASURE INDOOR WET BULB TEMPERATURE, OUTDOOR TEMPERATURE, LIQUID AND SUCTION PRESSURES. ON THE PLOTS, LOCATE OUTDOOR TEMPERATURE (1); LOCATE INDOOR WET BULB (2); FIND INTERSECTION OF OD TEMP. & ID W.B. (3); READ DISCHARGE (4) OR SUCTION PRESSURE (5) IN LEFT COLUMN.

THE COOLING CHARTS REPRESENT INDOOR ENTERING WET BULB CURVES (TOP TO BOTTOM ARE 71, 67, 63, AND 59 DEG. F)

ACTUAL:
DISCHARGE AND LIQUID PRESSURE SHOULD BE +/- 10 PSI OF CHART
SUCTION PRESSURE SHOULD BE +/- 3 PSIG OF CHART

RATED INTERCONNECTING LINES
GAS - 5/8” O.D.
LIQUID - 5/16”

DWG. NO. 5TTX7024A

Figure 21. 3 Ton AC (036 Models)

Cooling @ 1100 SCFM

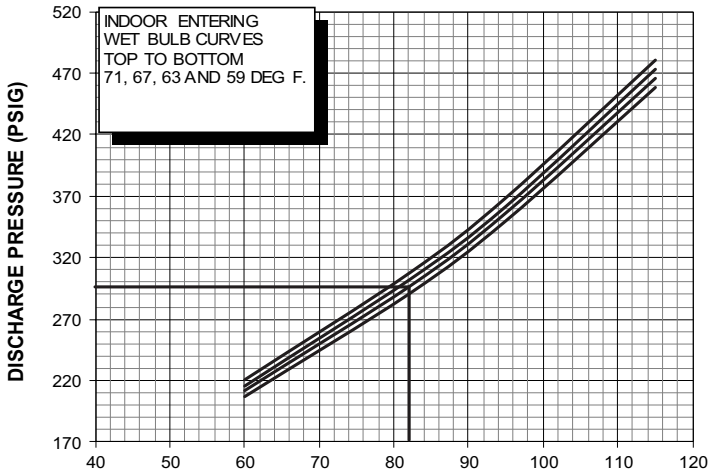

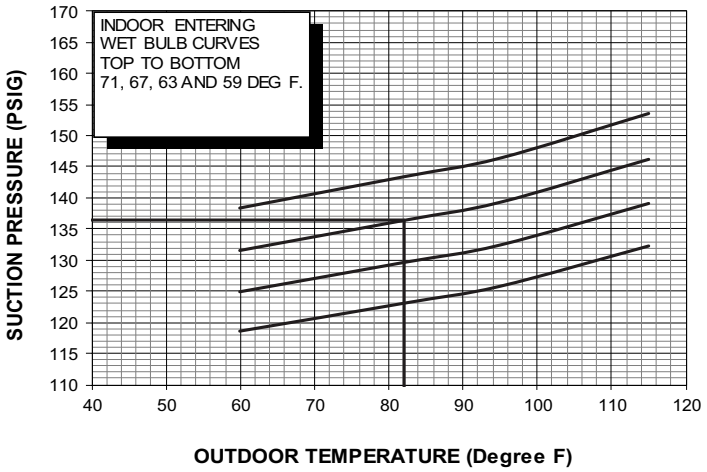

COOLING PERFORMANCE CAN BE CHECKED WHEN THE OUTDOOR TEMP IS ABOVE 55F.
* WHEN USING PRESSURE CURVES TO VERIFY TYPICAL PERFORMANCE, ALWAYS RUN THE SYSTEM WITH ONE OF THE TEST MODES FOUND IN THE 950/850 COMFORT CONTROL. CHARGING MODE - COOLING OR CHECK CHARGE MODE - HEATING.

TO CHECK COOLING PERFORMANCE, SELECT THE PROPER INDOOR CFM, ALLOW PRESSURES TO STABLIZE. MEASURE INDOOR WET BULB TEMPERATURE, OUTDOOR TEMPERATURE, LIQUID AND SUCTION PRESSURES. ON THE PLOTS, LOCATE OUTDOOR TEMPERATURE (1); LOCATE INDOOR WET BULB (2); FIND INTERSECTION OF OD TEMP. & ID W.B. (3); READ DISCHARGE (4) OR SUCTION PRESSURE (5) IN LEFT COLUMN.

THE COOLING CHARTS REPRESENT INDOOR ENTERING WET BULB CURVES (TOP TO BOTTOM ARE 71, 67, 63, AND 59 DEG. F)

ACTUAL:
DISCHARGE AND LIQUID PRESSURE SHOULD BE +/- 10 PSI OF CHART
SUCTION PRESSURE SHOULD BE +/- 3 PSIG OF CHART

RATED INTERCONNECTING LINES
GAS - 5/8” O.D.
LIQUID - 5/16”

DWG. NO. 5TTX7036A

Figure 22. 4 Ton AC (048 Models)

Cooling @ 1600 SCFM

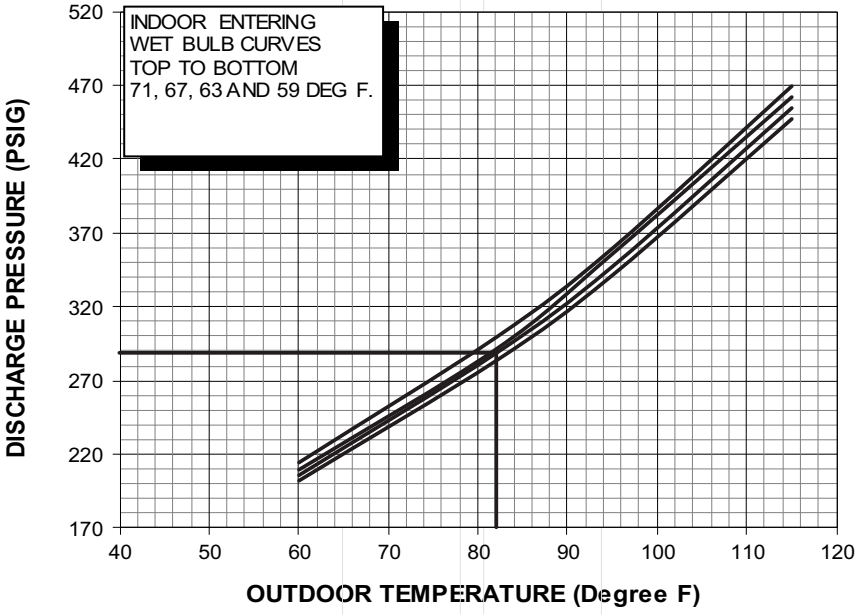

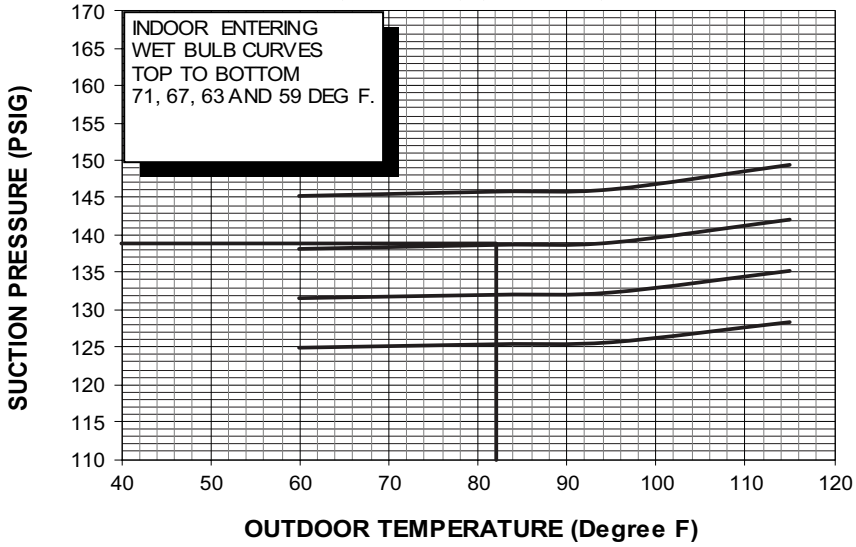

COOLING PERFORMANCE CAN BE CHECKED WHEN THE OUTDOOR TEMP IS ABOVE 55F.
* WHEN USING PRESSURE CURVES TO VERIFY TYPICAL PERFORMANCE, ALWAYS RUN THE SYSTEM WITH ONE OF THE TEST MODES FOUND IN THE 950/850 COMFORT CONTROL. CHARGING MODE - COOLING OR CHECK CHARGE MODE - HEATING.

TO CHECK COOLING PERFORMANCE, SELECT THE PROPER INDOOR CFM, ALLOW PRESSURES TO STABLIZE. MEASURE INDOOR WET BULB TEMPERATURE, OUTDOOR TEMPERATURE, LIQUID AND SUCTION PRESSURES. ON THE PLOTS, LOCATE OUTDOOR TEMPERATURE (1); LOCATE INDOOR WET BULB (2); FIND INTERSECTION OF OD TEMP. & ID W.B. (3); READ DISCHARGE (4) OR SUCTION PRESSURE (5) IN LEFT COLUMN.

THE COOLING CHARTS REPRESENT INDOOR ENTERING WET BULB CURVES (TOP TO BOTTOM ARE 71, 67, 63, AND 59 DEG. F)

ACTUAL:
DISCHARGE AND LIQUID PRESSURE SHOULD BE +/- 10 PSI OF CHART
SUCTION PRESSURE SHOULD BE +/- 3 PSIG OF CHART

RATED INTERCONNECTING LINES
GAS - 5/8” O.D.
LIQUID - 5/16”

DWG. NO. 5TTX7048A

Figure 23. 5 Ton AC (060 Models)

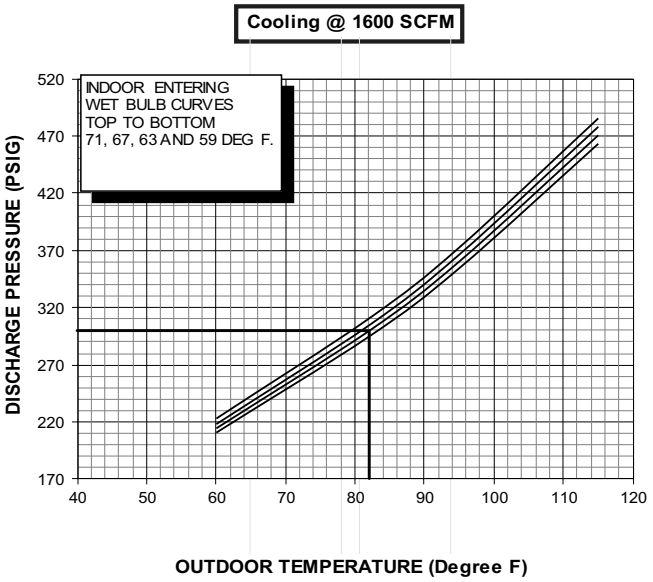

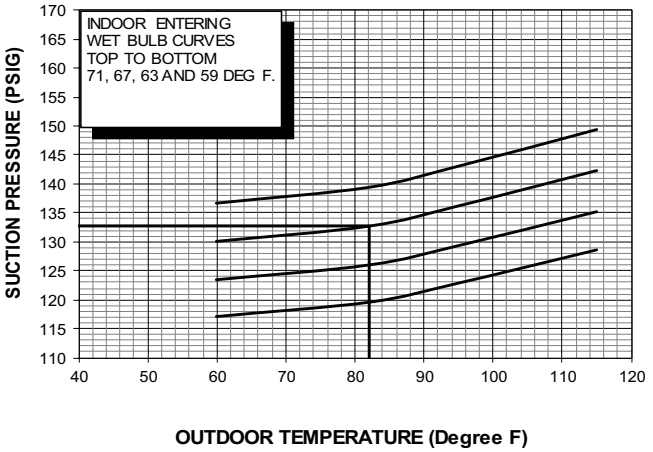

COOLING PERFORMANCE CAN BE CHECKED WHEN THE OUTDOOR TEMP IS ABOVE 55F.
* WHEN USING PRESSURE CURVES TO VERIFY TYPICAL PERFORMANCE, ALWAYS RUN THE SYSTEM WITH ONE OF THE TEST MODES FOUND IN THE 950/850 COMFORT CONTROL. CHARGING MODE - COOLING OR CHECK CHARGE MODE - HEATING.

TO CHECK COOLING PERFORMANCE, SELECT THE PROPER INDOOR CFM, ALLOW PRESSURES TO STABLIZE. MEASURE INDOOR WET BULB TEMPERATURE, OUTDOOR TEMPERATURE, LIQUID AND SUCTION PRESSURES. ON THE PLOTS, LOCATE OUTDOOR TEMPERATURE (1); LOCATE INDOOR WET BULB (2); FIND INTERSECTION OF OD TEMP. & ID W.B. (3); READ DISCHARGE (4) OR SUCTION PRESSURE (5) IN LEFT COLUMN.

THE HEATING CHARTS REPRESENT INDOOR ENTERING DRY BULB CURVES (TOP TO BOTTOM ARE 80, 70, AND 60 DEG F).
THE COOLING CHARTS REPRESENT INDOOR ENTERING WET BULB CURVES (TOP TO BOTTOM ARE 71, 67, 63, AND 59 DEG. F)

ACTUAL:
DISCHARGE AND LIQUID PRESSURE SHOULD BE +/- 10 PSI OF CHART
SUCTION PRESSURE SHOULD BE +/- 3 PSIG OF CHART

RATED INTERCONNECTING LINES
GAS - 5/8” O.D.
LIQUID - 5/16”

DWG. NO. 5TTX7060A

Warranty Claim Process
Integrated Variable Speed Control (Drive/MOC)

Servicing Dealers must obtain a pre-authorization number from a **Field Service Representative (FSR)** or a Factory Variable Speed Support Agent to obtain a warranty credit when replacing the Integrated Variable Speed Control Drive.

Pre-Authorization Process

If the Drive is suspected to have failed, servicing technicians must follow all troubleshooting guidelines found in the Service Facts or Technical Manual. The local FSR should be contacted for additional diagnostic assistance and/or to obtain a pre-authorization number when a Drive failure has been confirmed. If the local FSR is not available, technicians should call the Factory Variable Speed Support Agent at 1-855-211-8900. This number can also be found inside the control box cover of the Variable Speed Outdoor Unit.

Before a technician calls for pre-authorization:

- Record all alerts found on the AOC or MOC.

When a technician calls for pre-authorization from the job site:

- The FSR or Factory Variable Speed Support Agent will create a WMS ticket to log details of the diagnosis for the Drive warranty claim. The WMS ticket number will be provided to the technician.
- The technician should record and save the WMS ticket number. This will serve as the pre-authorization number.
- To file a warranty claim, the technician should provide the WMS pre-authorization number to the Parts Center agent when receiving the replacement Drive. If truck stock is used, provide the pre-authorization number with the returned Drive.
- The Parts Center representative will enter the pre-authorization number for warranty credit and give the technician a return invoice.
- The WMS ticket will be cross referenced. If invalid, the claim will be reversed.
- All Drives are on Mandatory Return. Use the label provided on the replacement Drive packaging box to record the WMS pre-authorization number and return date.

Notices

FCC Notice

Contains FCC ID: WAP3025

This device complies with part 15 of the FCC Rules. Operation is subject to the following two conditions: (1) This device may not cause harmful interference, and (2) this device must accept any interference received, including interference that may cause undesired operation. The antenna(s) used for this transmitter must be installed to provide a separation distance of at least 20 cm from all persons and must not be collocated or operating in conjunction with any other antenna or transmitter.
This equipment has been tested and found to comply with the limits for Class B Digital Device, pursuant to Part 15 of the FCC Rules. These limits are designed to provide reasonable protection against harmful interference in a residential installation. This equipment generates and can radiate radio frequency energy and, if not installed and used in accordance with the instructions, may cause harmful interference to radio communications. However, there is no guarantee that interference will not occur in a particular installation. If this equipment does cause harmful interference to radio or television reception, which can be determined by turning the equipment off and on, the user is encouraged to try to correct the interference by one or more of the following measures.

- *Reorient or relocate the receiving antenna*
- *Increase the separation between the equipment and receiver*
- *Connect the equipment into an outlet on a circuit different from that to which the receiver is connected*
- *Consult the dealer or an experienced radio/TV technician for help*

Any changes or modifications not expressly approved by the party responsible for compliance could void the user's authority to operate the equipment.

IC Notice

Contains IC ID: 7922A-3025

This device complies with Industry Canada license exempt RSS standard(s). Operation is subject to the following two conditions: (1) this device may not cause interference, and (2) this device must accept any interference, including interference that may cause undesired operation of the device.

Le present appareil est conforme aux CNR d'Industrie Canada applicables aux appareils radio exempts de license. L'exploitation est autorisée aux deux conditions suivantes: (1) l'appareil de doit pas produire de brouillage, et (2) l'utilisateur de l'appareil doit accepter tout brouillage radioélectrique subi, même si le brouillage est susceptible d'en compromettre le fonctionnement.

Refrigerant Properties

Table 11. Refrigerant properties

Pgauge (psig)	Superheat Dew Table (°F)	Subcooling Bubble Table (°F)
30	-12	-14
35	-7	-9
40	-2	-4
45	2	0
50	6	4
55	10	7
60	13	11
65	17	14
70	20	18
75	23	21
80	26	24
85	29	26
90	31	29
95	34	32
100	37	34
105	39	37
110	41	39
115	44	41
120	46	44
125	48	46
130	50	48
135	52	50
140	54	52
145	56	54
150	58	56
155	60	58
160	62	60
165	64	61
170	66	63
175	67	65
180	69	67
185	71	68
190	72	70
195	74	71
200	75	73
205	77	75
210	78	76
215	80	78

Table 11. Refrigerant properties (continued)

Pgauge (psig)	Superheat Dew Table (°F)	Subcooling Bubble Table (°F)
220	81	79
225	83	80
230	84	82
235	86	83
240	87	85
245	88	86
250	90	87
255	91	89
260	92	90
265	94	91
270	95	93
275	96	94
280	97	95
285	99	96
290	100	97
295	101	99
300	102	100
305	103	101
310	104	102
315	106	103
320	107	104
325	108	105
330	109	107
335	110	108
340	111	109
345	112	110
350	113	111
355	114	112
360	115	113
365	116	114
370	117	115
375	118	116
380	119	117
385	120	118
390	121	119
395	122	120
400	123	121
405	124	122
410	125	123

Table 11. Refrigerant properties (continued)

Pgauge (psig)	Superheat Dew Table (°F)	Subcooling Bubble Table (°F)
415	126	124
420	127	125
425	128	125
430	128	126
435	129	127
440	130	128
445	131	129
450	132	130
455	133	131
460	134	132
465	134	132
470	135	133
475	136	134
480	137	135

Table 11. Refrigerant properties (continued)

Pgauge (psig)	Superheat Dew Table (°F)	Subcooling Bubble Table (°F)
485	138	136
490	139	137
495	139	137
500	140	138
505	141	139
510	142	140
515	143	141
520	143	141
525	144	142
530	145	143
535	146	144
540	146	145
545	147	145
550	148	146

Notes

Trane - by Trane Technologies (NYSE: TT), a global innovator - creates comfortable, energy efficient indoor environments for commercial and residential applications. For more information, please visit trane.com or tranetechnologies.com.

Trane has a policy of continuous data improvement and it reserves the right to change design and specifications without notice. We are committed to using environmentally conscious print practices.

ODR-SVF002C-EN 13 Feb 2026
Supersedes ODR-SVF002B-EN (July 2025)

©2026 Trane